"THE MATERIAL HEREIN IS FOR INFORMATION PURPOSES ONLY AND IS SUBJECT TO CHANGE WITHOUT NOTICE. DIGITAL EQUIPMENT CORPORATION ASSUMES NO RESPONSIBILITY FOR ANY ERRORS WHICH MAY APPEAR HEREIN."

FIELD MAINTENANCE PRINT SET

"THIS DRAWING AND SPECIFICATIONS, HEREIN, ARE THE PROPERTY OF DIGITAL EQUIPMENT CORPORATION AND SHALL NOT BE REPRODUCED OR COPIED OR USED IN WHOLE OR IN PART AS THE BASIS FOR THE MANUFACTURE OR SALE OF ITEMS WITHOUT WRITTEN PERMISSION. COPYRIGHT © 1978 DIGITAL EQUIPMENT CORPORATION."

TABLE OF CONTENTS

B-TC-H9602-D-1	VAX UNIBUS OPTION CONFIGURATION (TC)
B-DD-H9602-D	VAX UNIBUS OPTION CONFIGURATION (DD)
B-AR-H9602-D-0	VAX UNIBUS OPTION CONFIGURATION
A-PL-H9602-D-0	VAX UNIBUS OPTION CONFIGURATION (PL)
A-PL-7015443-0-0	DZ11 EXPANSION KIT, REAR MTG (EIA, 20 MA)
A-PL-7015444-0-0	DZ11 EXPANSION KIT, FRONT MTG (EIA, 20 MA)
A-PL-7015445-0-0	BA11-K EXPANSION KIT
B-DD-BA11-K	BA11-K PRINT SET (COMPLETE)
B-DD-861-0	POWER CONTROL, 861 PRINT SET (COMPLETE)
B-DD-DZ11-A	DZ11-A PRINT SET (COMPLETE)
B-DD-DD11-D	DD11 PRINT SET (COMPLETE)

UNIT VARIATIONS COVERED BY THIS PRINT SET
H9602-DA
H9602-DB
H9602-DE
H9602-DH

H96Ø2-D
Field Maintenance Print Set

Digital Equipment Corporation

PRINT SET ORDER NO.
MP00577

* NOTE: FOR VARIATIONS H9602-DJ, H9602-DK SEE B-TC-7017416-0-1

REVISIONS	REV	CHG. NO.	DATE
	A	ML002	11-79
	B	H9602-D -TW003	4-80

USED ON OPTION/MODEL

SHEET 1 OF 1

DRN. R. BELANGER	DATE 1/4/78	
CHK'D D. HEALY	DATE 1/13/78	
PROJ. ENG. W.R. HALL	DATE 1/26/78	
FIELD SERV. BILL FREEMAN	DATE 1/27/78	

digital

TITLE: VAX UNIBUS OPTION CONFIGURATION

SIZE	CODE	NUMBER	REV.
B	TC	H9602-D-1	B

DIST.

REV. B
NUMBER H9602-D-1
CODE TC
SIZE B

DRB 124

TW

"THE MATERIAL HEREIN IS FOR INFORMATION PURPOSES ONLY AND IS SUBJECT TO CHANGE WITHOUT NOTICE. DIGITAL EQUIPMENT CORPORATION ASSUMES NO RESPONSIBILITY FOR ANY ERRORS WHICH MAY APPEAR HEREIN."

DRAWING DIRECTORY

"THIS DRAWING AND SPECIFICATIONS, HEREIN, ARE THE PROPERTY OF DIGITAL EQUIPMENT CORPORATION AND SHALL NOT BE REPRODUCED OR COPIED OR USED IN WHOLE OR IN PART AS THE BASIS FOR THE MANUFACTURE OR SALE OF ITEMS WITHOUT WRITTEN PERMISSION. COPYRIGHT © 1977 DIGITAL EQUIPMENT CORPORATION.

FOR FIELD MAINTENANCE PRINT SET
REFER TO B-TC-H96Ø2-D-1 OR
REFER TO B-TC-7017416-0-1 (FOR VARIATIONS -DJ, -DK ONLY)

UNIT VARIATIONS

VAR	TITLE
H96Ø2-DA	VAX UNIBUS EXP. CAB (115V, 60 HZ)
H96Ø2-DB	VAX UNIBUS EXP. CAB (23ØV, 50 HZ)
H96Ø2-DF	VAX UNIBUS EXP. CAB & 861-C P.S. 115V 60HZ
H96Ø2-DH	VAX UNIBUS EXP. CAB & 861-B P.S. 23ØV 60HZ
H9602-DJ	COMMUNICATIONS CAB (120V, 60HZ)
H9602-DK	COMMUNICATIONS CAB (230V,50HZ)

REVISIONS			
REV.		A	B
CHANGE NO.		ML002	H9602-D-TW003
CHK			

USED ON OPTION/MODEL

SHEET 1 OF 7

DRN. R. BELANGER	DATE 4 JAN 78	TITLE: VAX UNIBUS OPTION CONFIGURATION
CHK'D. D HEALY	DATE 13 JAN 78	
PROJ. ENG. WR Hall	DATE 26JAN78	SIZE B / CODE DD / NUMBER H9602-D / REV B
PROD. Bob Smith	DATE 26JAN78	DIST.

digital

DRB 106A

"THIS DRAWING AND SPECIFICATIONS, HEREIN, ARE THE PROPERTY OF DIGITAL EQUIPMENT CORPORATION AND SHALL NOT BE REPRODUCED OR COPIED OR USED IN WHOLE OR IN PART AS THE BASIS FOR THE MANUFACTURE OR SALE OF ITEMS WITHOUT WRITTEN PERMISSION.
COPYRIGHT ©77 DIGITAL EQUIPMENT CORPORATION"

1 — VAX UNIBUS OPTION CONFIGURATION
B-AR-H96Ø2-D
A-PL-H96Ø2-D

2 — FRAME ASSY, SINGLE HIBOY
E-AD-7011588-0-0
A-PL-7011588-0-0

3 — PIVOT ARM, ISOLATOR
D-IA-7011294-0-0

4 — SCREEN ASSY
D-IA-7011964-0-0

5 — SCREEN/HAT SECTION ASSY
D-IA-7011961-0-0

6 — STABILIZER SLEEVE ASSY
E-IA-7011284-0-0

7 — LEVELER FOOT BRACKET ASSY
D-IA-7011766-0-0

8 — INTERLOCK KIT (MARK III) L.H.
E-AD-7013688-0-0

9 — ASSEMBLY, CHURCHKEY
C-IA-7013667-0-0

10 — END PANEL (HIBOY)
A-PL-H95Ø4-C-Ø

11 — END PANEL ASSY (HIBOY)
E-IA-7011509-0-0

12 — REAR DOOR (SINGLE HIBOY)
A-PL-H95Ø4-K-Ø

13 — DOOR ASSY, REAR (SINGLE HIBOY)
E-IA-7014175-0-0

14 — DOOR, WELDMENT, (RIGHT, REAR)
E-IA-7014206-01

15 — HINGE BRACKET ASSY
C-IA-7011547-0-0

16 — SPRING RECEPTACLE ASSY
C-IA-7416224-1-0

17 — COVER, CABINET TOP
E-IA-7011552-0-0

18 — FILLER STRIP (INTER CAB)
A-PL-H95Ø4-X-Ø

19 — FILLER STRIP ASSY (INTER CAB)
D-IA-7011838-0-0

20 — DOOR, FRONT, ASSY (EXPANDER CAB)
E-AD-7015206-0-0

21 — DOOR, FRONT, WELDMENT
E-IA-7015205-0-0

22 — TROUGH, CABLE
E-PS-1213092-0-0

23 — EXTRUSION, REWORK EXPANSION CAB
D-MD-7418972-0-0

24 — POWER CONTROL 861
B-DD-861-Ø

25 — UNIT ASSY BA11-K
B-DD-BA11-K

26 — DOOR STOP WELDMENT
B-IA-7013925-0-0

CONTINUED ON SHEET #3

TITLE	SHEET	SIZE	CODE	NUMBER	REV
VAX UNIBUS OPTION CONFIGURATION	SHEET 2 OF 7	B	DD	H96Ø2-D	B

TW

"THIS DRAWING AND SPECIFICATIONS, HEREIN, ARE THE PROPERTY OF DIGITAL EQUIPMENT CORPORATION AND SHALL NOT BE REPRODUCED OR COPIED OR USED IN WHOLE OR IN PART AS THE BASIS FOR THE MANUFACTURE OR SALE OF ITEMS WITHOUT WRITTEN PERMISSION.
COPYRIGHT ©78 DIGITAL EQUIPMENT CORPORATION"

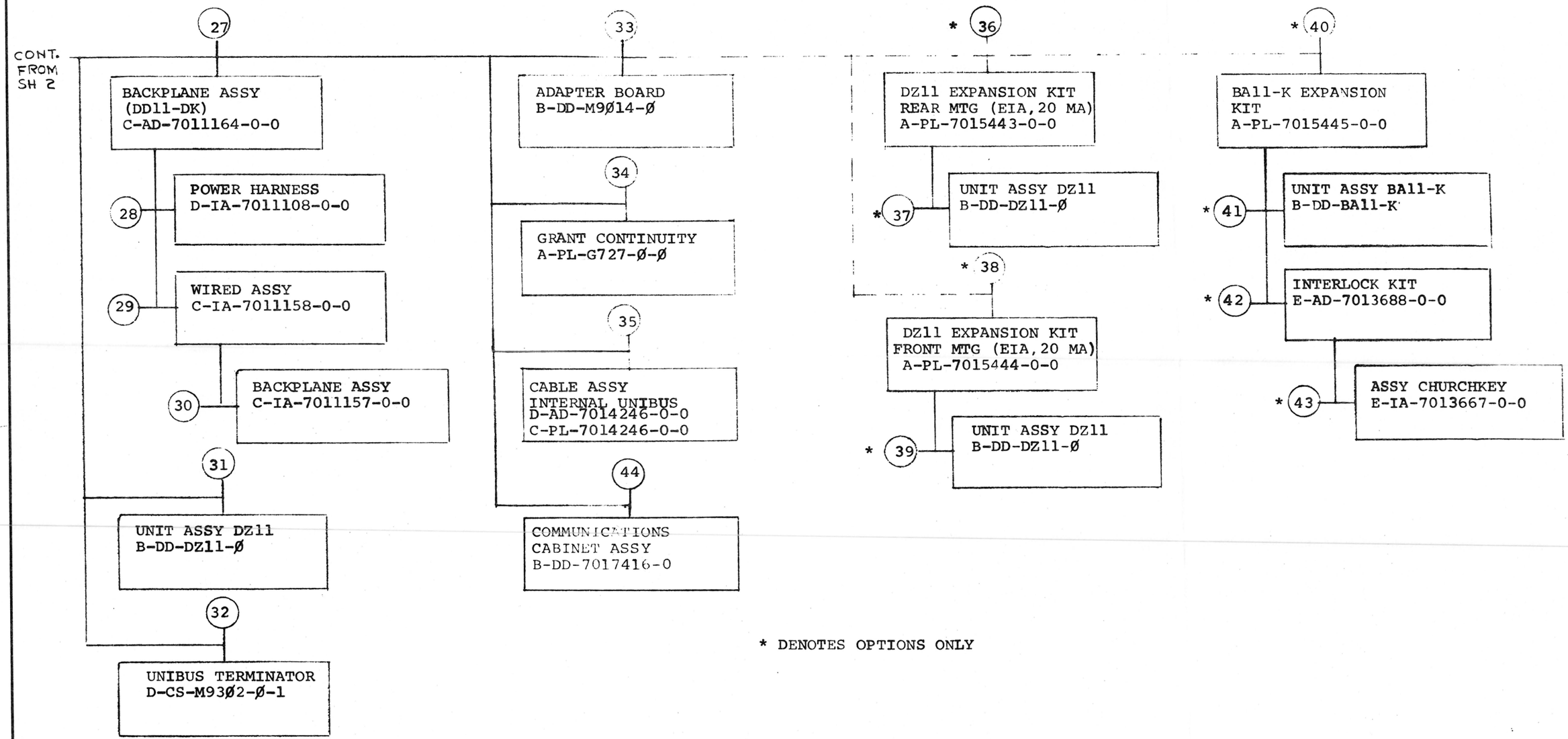

* DENOTES OPTIONS ONLY

TITLE	SHEET	SIZE	CODE	NUMBER	REV
VAX UNIBUS OPTIONS CONFIGURATION	SHEET 3 OF 7	B	DD	H9602-D	B

TW

FIND NO.	DRAWING NO.	DESCRIPTION	TYPE
	MPØØ577	VAX UNIBUS OPTION CONFIGURATION (PRINT SET ORDER NO.	-
	B-TC-H96Ø2-D-1	VAX UNIBUS OPTION CONFIGURATION (TC)	-
1	B-AR-H96Ø2-D-Ø	VAX UNIBUS OPTION CONFIGURATION	E/M
	A-PL-H96Ø2-D-Ø	VAX UNIBUS OPTION CONFIGURATION (PL)	E/M
	A-SP-H96Ø2-D-2	UNIBUS CAB ASSY PROCEDURE	E/M
	E-AR-H95Ø2-D-Ø	OPTION ARRANGEMENT (REF)	M
	A-SP-7015551-0-1	MFG SPEC: ASSY PROCEDURE FOR H96Ø2-DE (CAB) REF	M
	C-IA-7414622-0-0	LOCK STUD ASSY	M
	C-IA-7418104-0-0	EXTRUSION MTG BRACKET	M
	C-IA-7420936-0-0	STRIKE PLATE, BOTTOM, FRONT	M
	C-IA-7418187-0-0	STRIKE PLATE, TOP, FRONT	M
	C-IA-7418188-0-0	CATCH LOCKING	M
	C-MD-7418101-0-0	CATCH MTG BRACKET	M
	C-MD-7417851-0-0	PIVOT BUSHING	M
	D-IA-7414167-0-0	PLATE, CONN. MTG	M
	B-MD-7417197-0-0	PLATE, COVER	M
	C-IA-7411632-0-0	STRAIN RELIEF	M
	C-IA-7411633-0-0	CLAMP, STRAIN RELIEF	M
	C-MD-7415654-0-0	SUPPORT, ROLLER	M
	B-MD-7413664-0-0	BRACKET LOCKING	M
	D-UA-BCØ3M-Ø-Ø	CORD EXTENSION NULL MODEM	E/M
	C-IA-7008288-0-0	CABLE ASSY	E/M
2	E-AD-7011588-0-0	FRAME ASSY, SINGLE HIBOY	M
	A-PL-7011588-0-0	FRAME ASSY, SINGLE HIBOY (PL)	M
	D-IA-7413635-0-0	LATERAL	M
	E-IA-7413636-0-0	HORIZONTAL, SINGLE	M
	C-IA-7414140-0-0	PLATE BOLTING	M
	E-MD-7414087-0-0	ARM STABILIZER	M
	D-MD-7414090-0-0	BRACKET, HANGAR	M
	C-MD-7413998-0-0	PIN, PIVOT	M
	E-MD-7416418-0-0	VERTICAL (HIBOY)	M
	E-MD-7416543-0-0	VERTICAL (FULL LENGTH)	M
	D-MD-7417731-0-0	POST REAR MTG	M
	D-MD-7416657-0-0	STIFFENER, SINGLE HORIZONTAL (BACK)	M
	D-MD-7417372-0-0	ROD INTERLOCK (HIBOY)	M
	C-MD-7416523-0-0	BRACKET, GUIDE	M
	C-IA-7416679-0-0	CAM FOLLOWER	M
	C-MD-7417593-0-0	BRACKET, WHEEL LOCK	M
3	D-IA-7011294-0-0	PIVOT ARM ISOLATOR	M
	D-MD-7414103	BRACKET, PIVOT	M
	D-MD-7414104-0-0	SUPPORT, PIVOT BRACKET	M
4	D-IA-7011964-0-0	SCREEN ASSY	M
	E-MD-7416175-0-0	FRAME, BOTTOM SCREEN	M
5	D-IA-7011961-0-0	SCREEN HAT SECTION ASSY	M
	D-MD-7415016-0-0	SCREEN BOTTOM	M
	C-MD-7415020-0-0	SCREEN, HAT SECTION	M
6	E-IA-7011284-0-0	STABILIZER SLEEVE ASSY	M
	E-IA-7414083-0-0	SLEEVE	M
7	D-IA-7011766-0-0	LEVELER, FOOT BRACKET ASSY	M
	D-MD-7414734-0-0	BRACKET, LEVELER FOOT	M
	C-MD-7414733-0-0	INSERT BLANK	M
8	E-AD-7013688-0-0	INTERLOCK KIT (MARK III) L.H.	M
	A-PL-7013688-0-0	INTERLOCK KIT (MARK III) (PL)	M
	C-MD-7416222-0-0	RETAINER, INTERLOCK	M
	D-MD-7416424-0-0	PLATE CAM L.H.	M
	D-IA-7416221-0-0	PLATE. BACK	M
	D-IA-7416556-0-0	BRACKET, OUT RIGGER	M
	C-MD-7417977-0-0	KEY, HEX	M

TYPE: E ELECTRICAL
M MECHANICAL
E/M ELECTRO/MECHANICAL

digital

TITLE VAX UNIBUS OPTION CONFIGURATION

SHEET 4 OF 7 | SIZE B | CODE DD | NUMBER H96Ø2-D | REV B

DRB 108A

TW

FIND NO.	DRAWING NO.	DESCRIPTION	TYPE
9	C-IA-7013667-0-0	ASSY, CHURCHKEY	M
	C-MD-7416220-0-0	LEVER	M
	C-MD-7418173-0-0	CHURCHKEY	M
10	A-PL-H95Ø4-C-Ø	END PANEL (HIBOY) (PL)	M
	C-MD-7414318-0-0	KEY, BUTTON	M
11	E-IA-7011509-0-0	END PANEL ASSY	M
	E-MD-7414601-0-0	PANEL, END	M
	D-MD-7414314-0-0	STIFFENER, END PANEL	M
	D-MD-7414542-0-0	CAP, CORNER	M
	C-IA-7415321-0-0	PLATE, GROUNDING	M
	C-IA-7415578-0-0	STRAP, GROUND	M
12	A-PL-H95Ø4-K-Ø	REAR DOOR (SINGLE HIBOY) (PL)	M
	E-MD-7415471-0-0	DOOR, CLOSING STRIP	M
13	E-IA-7014175-0-0	DOOR ASSY, REAR	M
	C-IA-7415578-0-0	STRAP, GROUND	M
14	E-IA-7014206-01	DOOR WELDMENT RIGHT REAR	M
	E-MD-7419007-01	DOOR (RIGHT REAR)	M
	C-MD-7415307-0-0	BRACKET, SUPPORT	M
	C-MD-7415321-0-0	PLATE, GROUNDING	M
15	C-IA-7011547-0-0	HINGE BRACKET, ASSY	M
	C-MD-7414834-0-0	BRACKET, HINGE	M

FIND NO.	DRAWING NO.	DESCRIPTION	TYPE
	C-MD-7415504-0-0	GUSSET	M
16	C-IA-7416224-1-0	SPRING RECEPTACLE ASSY	M
	C-MD-7415308-1-0	BRACKET SPRING RECEPTACLE	M
17	E-IA-7011552-0-0	COVER, CABINET TOP	M
	E-MD-7414551-0-0	PANEL, COVER	M
	D-IA-7415363-0-0	STIFFENER, TOP COVER	M
	C-IA-7415321-0-0	PLATE, GROUNDING	M
	C-IA-7415578-0-0	STRAP, GROUND	M
	C-MD-7417022-0-0	CATCH, TOP COVER	M
18	A-PL-H95Ø4-X-Ø	FILLER STRIP (INTERCAB) (PL)	M
	D-MD-7414403-0-0	STRIP, TOP FILLER (INTERCAB)	M
19	D-IA-7011838-0-0	FILLER STRIP ASSY (INTERCAB HIBOY)	M
	D-MD-7414409-0-0	STRIP FILLER	M
	D-MD-7414542-0-0	CAP, CORNER	M
20	E-UA-7015206-0-0	FRONT DOOR ASSY (EXPANDER CAB)	M
	C-MD-7418086-0-0	RETAINER, FILTER	M
	D-MD-7418196-0-0	BRACKET, FILTER SIMULATOR	M
	B-MD-7418968-0-0	PIN, PIVOT TOP	M
	B-MD-7417859-0-0	PIN, DOOR RETAINER	M
21	E-IA-7015205-0-0	DOOR FRONT WELDMENT	M
	B-MD-7418103-0-0	DOOR STOP	M
	E-MD-7420204-0-0	DOOR FRONT	M
	D-IA-7418195-0-0	FILTER HSG BRACKET	M

TYPE: E ELECTRICAL
M MECHANICAL
E/M ELECTRO/MECHANICAL

digital

TITLE	SHEET	SIZE	CODE	NUMBER	REV
VAX UNIBUS OPTION CONFIGURATION	5 OF 7	B	DD	H9602-D	B

DRB 108A

TW

FIND NO.	DRAWING NO.	DESCRIPTION	TYPE
	C-MD-7414430-0-0	PIVOT SPRING RETAINER	M
22	E-PS-1213092-0-0	TROUGH, CABLE	M
23	E-MD-7418972-0-0	EXTRUSION, EXPANSION CAB	M
	1213873-0-0	EXTRUSION	M
24	B-DD-861-Ø	POWER CONTROL 861	E/M
25	B-DD-BA11-K	UNIT ASSY BA11-K	E/M
26	B-IA-7013925-0-0	DOOR STOP/WELDMENT	M
	B-MD-7417862-0-0	PLATE, PIVOT	M
	B-MD-7418193-0-0	PIN, DOOR STOP	M
27	C-AD-7011164-0-0	BACKPLANE ASSY (DD11-DK)	E/M
28	D-IA-7011108-0-0	POWER HARNESS	E/M
	A-DC-7409872-2-0	DECAL, POWER HARNESS	M
29	C-IA-7011158-0-0	WIRED ASSY (DD11-D)	E/M
	A-DC-7411881-0-0	LABEL, AWT REV STATUS	M
	B-DC-5308753-0-0	DECAL 21 PT (LTR)	M

FIND NO.	DRAWING NO.	DESCRIPTION	TYPE
	K-WL-DD11-D-1	WIRE LIST	E
	A-WT-7011158-0	AWT REV STATUS	E/M
30	D-IA-7011157-0-0	BACKPLANE ASSY	E/M
	5011413	ETCH CIRCUIT BOARD	E/M
31	B-DD-DZ11-Ø	UNIT ASSY DZ11	E/M
32	D-CS-M93Ø2-Ø-1	UNIBUS TERMINATOR	E/M
33	B-DD-M9Ø14-Ø	ADAPTER BOARD	E/M
34	A-PL-G727-Ø-Ø	GRANT CONTINUITY (PL)	E/M
	B-CS-G727-Ø-1	CIRCUIT SCHEMATIC	E/M
35	D-AD-7014246-0-0	CABLE ASSY INTERNAL UNIBUS	E/M
	C-PL-7014246-0-0	CABLE ASSY INTERNAL UNIBUS (PL)	E/M
	A-DC-7409872-2-0	DECAL POWER HARNESS	M
	D-UA-BCØ5L-Ø-Ø	CABLE JUMPER	E/M
		(Find #36 thru #42 are optional)	
36	A-PL-7015443-0-0	DZ11 EXPANSION KIT REAR MTG (EIA. 20 MA)	E/M
	C-IA-7411632-0-0	STRAIN RELIEF	M
	C-IA-7411633-0-0	CLAMP, STRAIN RELIEF	M
	A-SP-7015443-0-1	MFG PROCEDURE (ADDITION OF H317 #2)	E/M
	D-IA-BCØ5M-Ø-Ø	CORD EXTENSION NULL MODEM	E/M

TYPE: E ELECTRICAL
M MECHANICAL
E/M ELECTRO/MECHANICAL

digital

TITLE	SHEET	SIZE	CODE	NUMBER	REV
VAX UNIBUS OPTION CONFIGURATION	6 OF 7	B	DD	H9602-D	B

DRB 108A

TW

FIND NO.	DRAWING NO.	DESCRIPTION	TYPE
37	B-DD-DZ11	UNIT ASSY DZ11	E/M
38	A-PL-7015444-0-0	DZ11 EXPANSION KIT FRONT MTG (EIA, 20 MA)	E/M
	C-MD-7420121-0-0	BRACKET PANEL (R.H.)	M
	C-MD-7420122-0-0	BRACKET PANEL (L.H.)	M
	A-SP-7015444-0-1	MFG PROCEDURE (ADDITION OF H317 #3)	E/M
	D-IA-BCØ8M-Ø-Ø	CORD EXTENSION, NULL MODEM	E/M
39	B-DD-DZ11-Ø	UNIT ASSY DZ11	E/M
40	A-PL-7015445-0-0	BA11-K EXPANSION KIT	E/M
	B-MD-7413664-0-0	BRACKET, LOCKING	M
	C-MD-7415654-0-0	SUPPORT ROLLER	M
	A-SP-7015445-0-1	MFG PROCEDURE (ADDITION OF BA11-K #2)	E/M
	D-IA-BCØ3M-Ø-Ø	CORD EXTENSION NULL MODEM	E/M
41	B-DD-BA11-K	UNIT ASSY BA11-K	E/M
42	E-AD-7013688-0-0	INTERLOCK KIT (MARK III) L.H.	M
	A-PL-7013688-0-0	INTERLOCK KIT (MARK III) L.H. (PL)	M
	C-MD-7416222-0-0	RETAINER INTERLOCK	M
	D-MD-7416224-0-0	PLATE, CAM L.H.	M
	D-IA-7416221-0-0	PLATE, BACK	M
	D-IA-7416556-0-0	BRACKET, OUT RIGGER	M
	C-MD-7417977-0-0	KEY, HEX	M

FIND NO.	DRAWING NO.	DESCRIPTION	TYPE
43	C-IA-7013667-0-0	ASSY, CHURCHKEY	M
	C-MD-7416220-0-0	LEVER	M
	C-MD-7418173-0-0	CHURCHKEY	M
44	B-DD-7017416-0	COMMUNICATIONS CAB ASSY	E/M

"THIS DRAWING AND SPECIFICATIONS, HEREIN, ARE THE PROPERTY OF DIGITAL EQUIPMENT CORPORATION AND SHALL NOT BE REPRODUCED OR COPIED OR USED IN WHOLE OR IN PART AS THE BASIS FOR THE MANUFACTURE OR SALE OF ITEMS WITHOUT WRITTEN PERMISSION.
COPYRIGHT © 1977 DIGITAL EQUIPMENT CORPORATION"

TABLE OF CONTENTS

REVISIONS		
CHK	CHANGE NO.	REV.
TS	H9602-D-ML0001	A
L Thacker 25 JULY 79		
T. STONE		
T. Ston 20 AUG 79		
BN	H9602-D-ML0002	B
N. Bigwarah 4 Dec 79		
P. BARTH		
P Barth 4 DEC 79		
PB	H9602-D-TW0002	C
K. Vanhjian 7 APR 80		
R. BATTERSBY		
B.L Battersby 16 APRIL 80		
H.P.	H9602-D-TW0004	D
W. Cunnell 10 JUNE 80		
R. CHUMSAE		
R Chumsae 23-JUN-80		

SHEET NO.

1. INDEX
2. BASIC UNIBUS CONFIGURATION
3. FULL CAPACITY CONFIGURATION
4. CABINET STRUCTURE
5. ASSEMBLY GUIDELINE (HOLE LOC.)
6. ROUTING FOR BASIC CONFIGURATION (FIG. I)
7. FRONT VIEW - ROUTING (FIG II)
8. ROUTING FOR FULL CAPACITY CONFIGURATION (FIG III)
9. TABULATED CABLE ROUTING
10. CABLE TERMINATIONS (FIG IV)
11. ASSEMBLY SKETCHES (FIG VI, VII, VIII & IX)
12. INTERCONNECTION DIAGRAM (FIG V)

NOTE: THIS DOCUMENT DOES NOT APPLY TO VARIATIONS -DJ, OR -DK.

ENG. D. Blom	26 JAN 78	FIRST USED ON
CHK. D. Neal	26 JAN 79	digital
MKT. Al Avery	26 JAN 78	TITLE
PROD. Bob Brink	26 JAN 78	VAX UNIBUS OPTION CONFIGURATION
FIELD Bill Chumsae	27 JAN 78	
NEXT HIGHER ASSY.		
B-DD-H9602-D-0		SIZE B / CODE AR / NUMBER H9602-D-0 / REV. D
SCALE NONE		
SHEET 1 OF 12		DIST.

EN-01121-16-N575-(325)-
DRB 121

B AR H9602-D-0 D

"THIS DRAWING AND SPECIFICATIONS, HEREIN, ARE THE PROPERTY OF DIGITAL EQUIPMENT CORPORATION AND SHALL NOT BE REPRODUCED OR COPIED OR USED IN WHOLE OR IN PART AS THE BASIS FOR THE MANUFACTURE OR SALE OF ITEMS WITHOUT WRITTEN PERMISSION.
COPYRIGHT ©1977, DIGITAL EQUIPMENT CORPORATION"

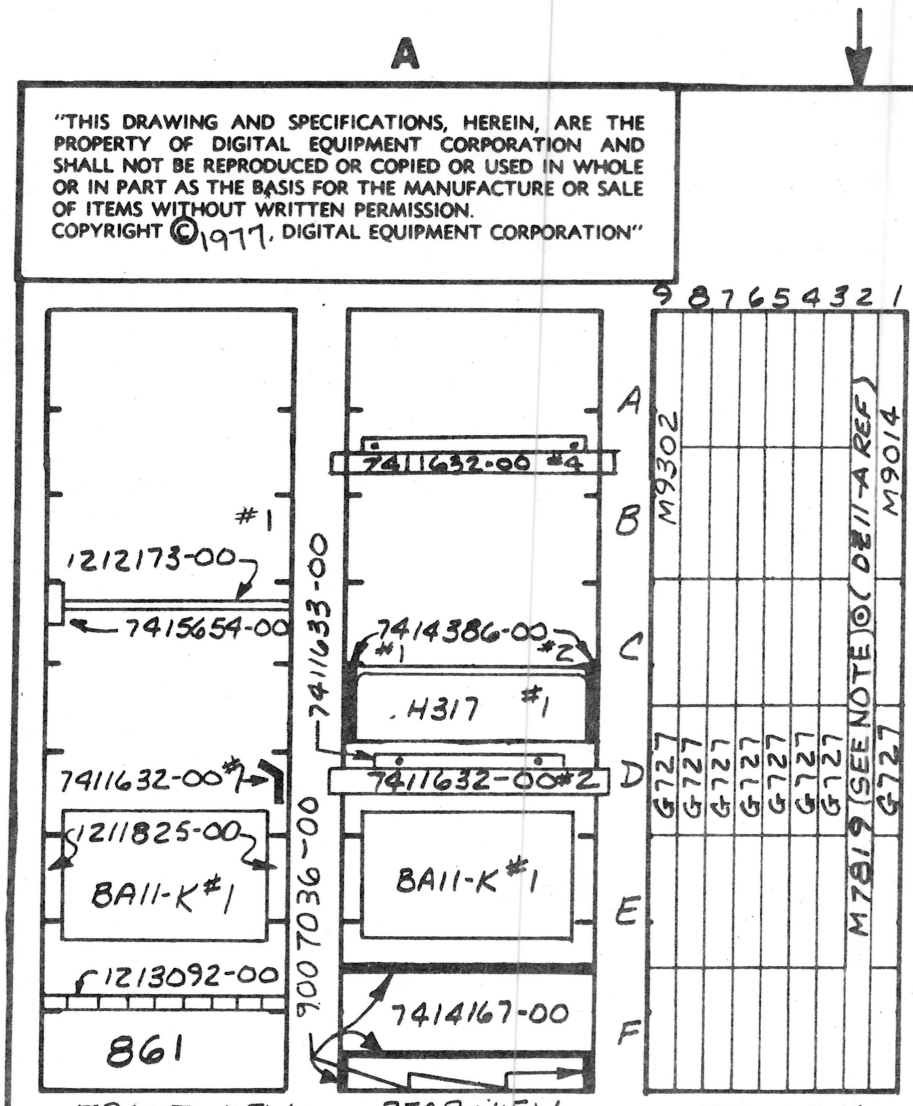

REVISIONS		
CHK	CHANGE NO.	REV.

A/R	CORD EXTENSION NULL MODE	D-IA-BCØ3M	115 V 60HZ: AØ	230V 50HZ: AØ	115 V 60HZ: —	230V 50HZ: —	20
* REF	8 LINE ASYNC. MUX	D-UA-M7819-Ø-Ø	1	1	—	—	19
REF	VAX OPTION CONFIGURATION	PL-H96Ø2-	DA	DB	—	—	18
REF	MOUNTING BRACKET	7414386-	00	00	—	—	17
◎ 1	8 LINE MULTIPLEXER	DZ11-	A	A	—	—	16
1	UNIBUS TERMINATOR	M93Ø2	00	00	—	—	15
1	ADAPTER P.C. BOARD	M9Ø14	00	00	—	—	14
8	GRANT CONTINUITY CARD	G727	00	00	—	—	13
1	DD11-DK BACKPLANE	7011164-	00	00	—	—	12
* REF	CABLE BOX (DZ11-A)	H317	E	E	—	—	11
1	SUPPORT, ROLLER	7415654-	00	00	—	—	10
1	ROD & TUBE ASS'Y	1212173-	00	00	—	—	9
A/R	GROMMET CATERPILLAR	9007036	00	00	—	—	8
1	CABLE ASSY	7008288	05	05	—	—	7
REF	SLIDE, 3 POS. TILT (PR)	1211825-	00	00	—	—	6
3	STRAIN RELIEF	7411632	00	00	—	—	5
1	PLATE, CONN. MTG	7414167-	00	00	—	—	4
1	TROUGH, CABLE	1213092-	00	00	—	—	3
1	UNIT ASSY	BA11-	KE	KF	—	—	2
1	POWER CONTROL	861	C	B	C	B	1
	SYSTEM - BASIC	H96Ø2-	DA	DB	DF	DH	

QUANTITY	DESCRIPTION	DWG./PART NO.	VARIATION	ITEM NO.

NOTES
◎ ALSO AVAILABLE DZ11-C OPTION WITH M7814 9 LINE 20MA
* PART OF ITEM 16

TITLE	SIZE	CODE	NUMBER	REV.
VAX UNIBUS OPTION CONFIGURATION	B	AR	H96Ø2-D-Ø	D
SCALE —H— SHEET 2 OF 12	DIST.			

"THIS DRAWING AND SPECIFICATIONS, HEREIN, ARE THE PROPERTY OF DIGITAL EQUIPMENT CORPORATION AND SHALL NOT BE REPRODUCED OR COPIED OR USED IN WHOLE OR IN PART AS THE BASIS FOR THE MANUFACTURE OR SALE OF ITEMS WITHOUT WRITTEN PERMISSION.
COPYRIGHT ©1977, DIGITAL EQUIPMENT CORPORATION"

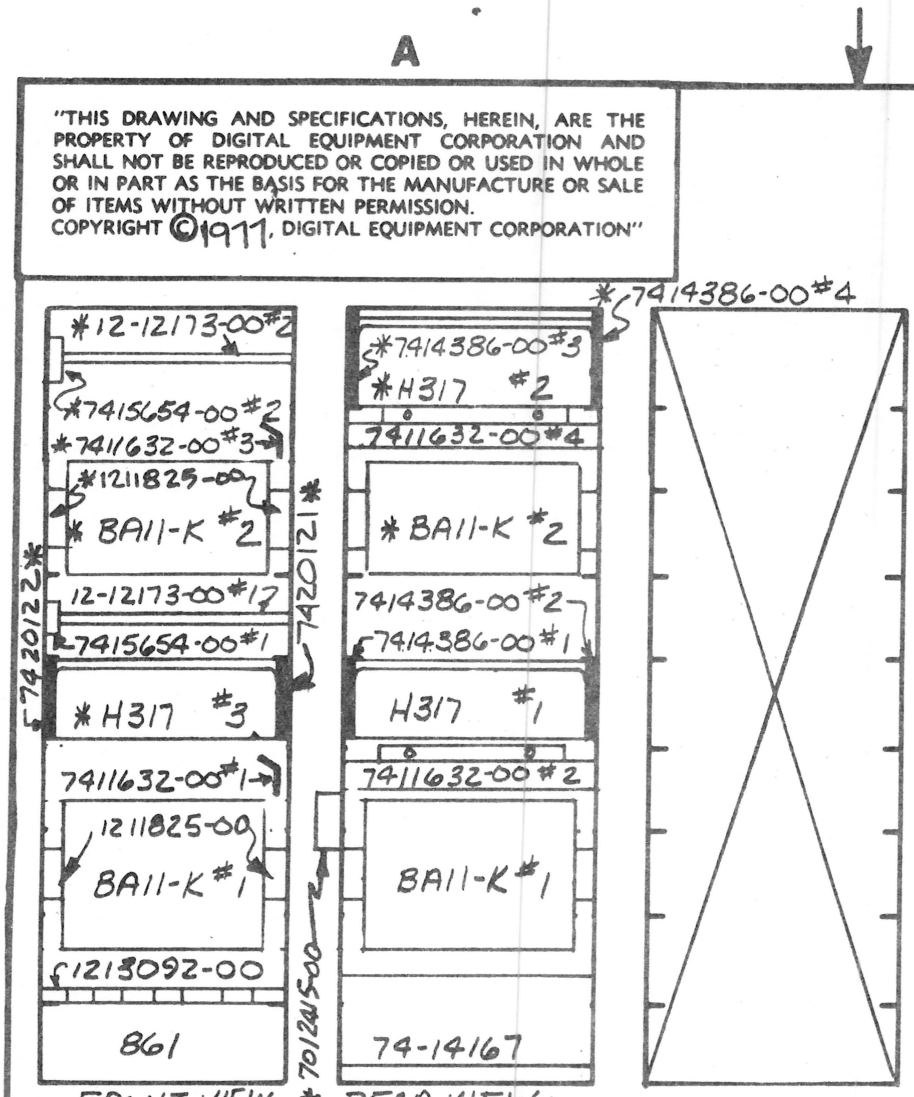

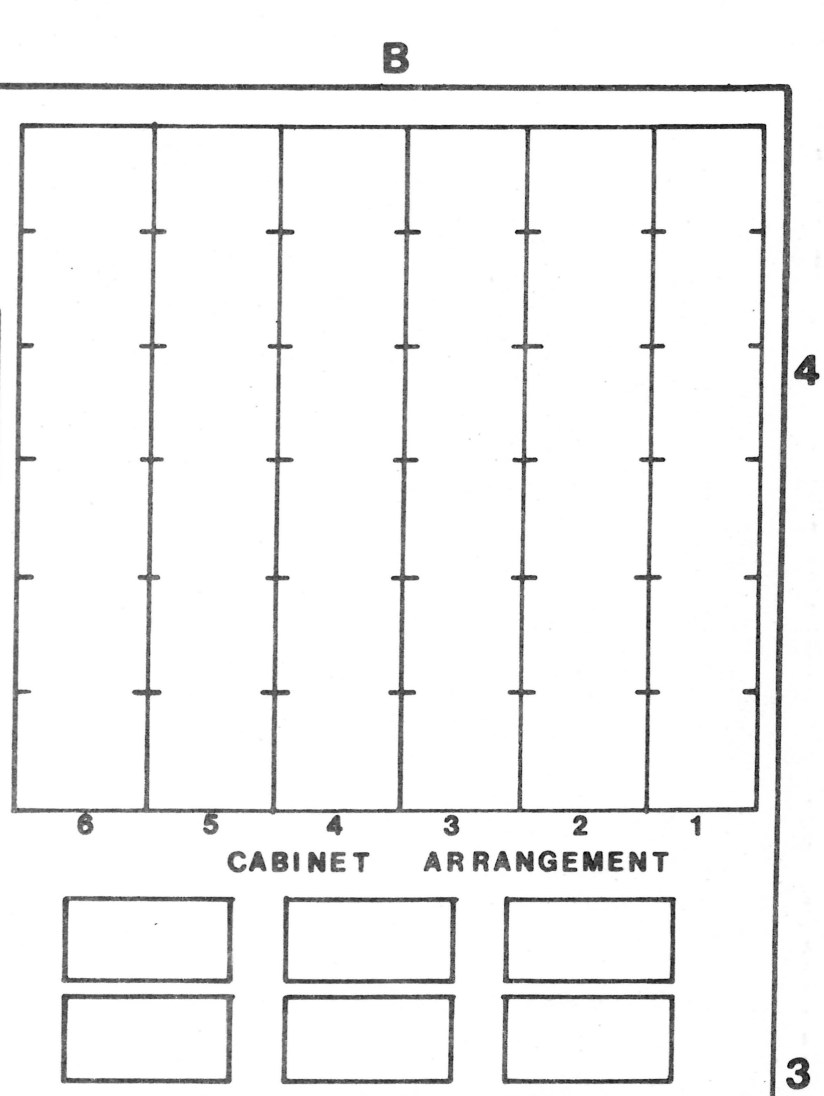

FULL CAPACITY CONFIGURATION
(SEE SHEET 5 TABLE A)
(* DENOTES OPTIONS)

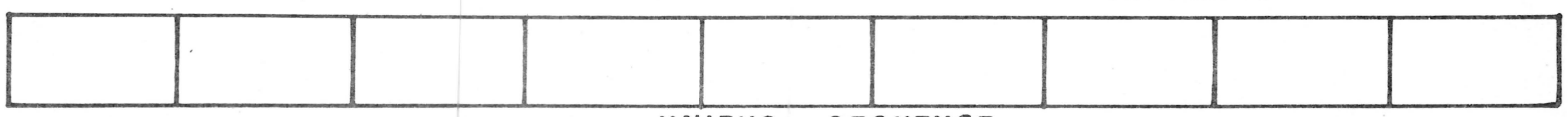

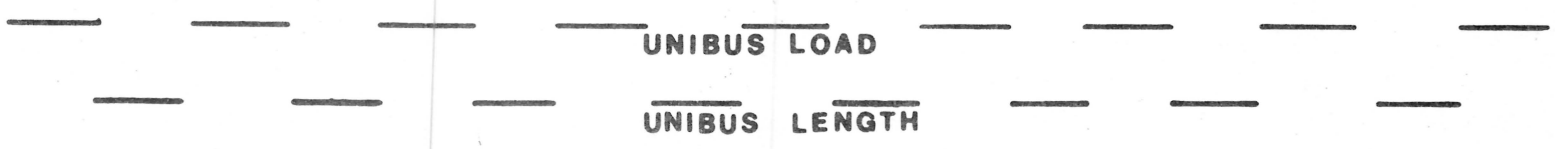

REVISIONS		
CHK	CHANGE NO.	REV.

QUANTITY	DESCRIPTION	DWG./PART NO.	VARIATION		ITEM NO.
* 1	MTG BRKT RKØØ CNTR (SUPPLIED WITH RK611)	7012415	ØØ	ØØ	10
REF	MFG SPEC BA11-K	SP-7015445-0-1	-	-	9
* 1	BA11-K EXP KIT (FOR BA11-K #2)	7015445	ØØ	Ø1	8
⊕ REF	MFG SPEC DZ11- A/C FRONT MTG	SP-7015444-0-1	-	-	7
◉ REF	MFG SPEC DZ11- A/C REAR MTG	SP-7015443-0-1	-	-	6
⊕* 1	DZ11 EXP KIT FR MTG DZ11-C (20MA)	7015444	Ø1	Ø1	5
⊕* 1	DZ11 EXP KIT FR MTG DZ11-A (EIA)	7015444	ØØ	ØØ	4
◉* 1	DZ11 EXP KIT REAR MTG DZ11-C (20MA)	7015443	Ø1	Ø1	3
◉* 1	DZ11 EXP KIT REAR MTG DZ11-A (EIA)	7015443	ØØ	ØØ	2
1	VAX UNIBUS OPTION CONFIGURATION (BASIC)	H96Ø2-	DA	DB	1
X	SYSTEM - BASIC	H96Ø2-	DA	DB	X

NOTES
* DENOTES OPTIONS
◉ FOR H317 #2
⊕ FOR H317 #3

TITLE	SIZE	CODE	NUMBER	REV.
VAX UNIBUS OPTION CONFIGURATION	B	AR	H96Ø2-D-Ø	D
SCALE NONE	SHEET 3 OF 12	DIST.		

B AR H96Ø2-D-Ø D

"THIS DRAWING AND SPECIFICATIONS, HEREIN, ARE THE PROPERTY OF DIGITAL EQUIPMENT CORPORATION AND SHALL NOT BE REPRODUCED OR COPIED OR USED IN WHOLE OR IN PART AS THE BASIS FOR THE MANUFACTURE OR SALE OF ITEMS WITHOUT WRITTEN PERMISSION.
COPYRIGHT ©1977, DIGITAL EQUIPMENT CORPORATION"

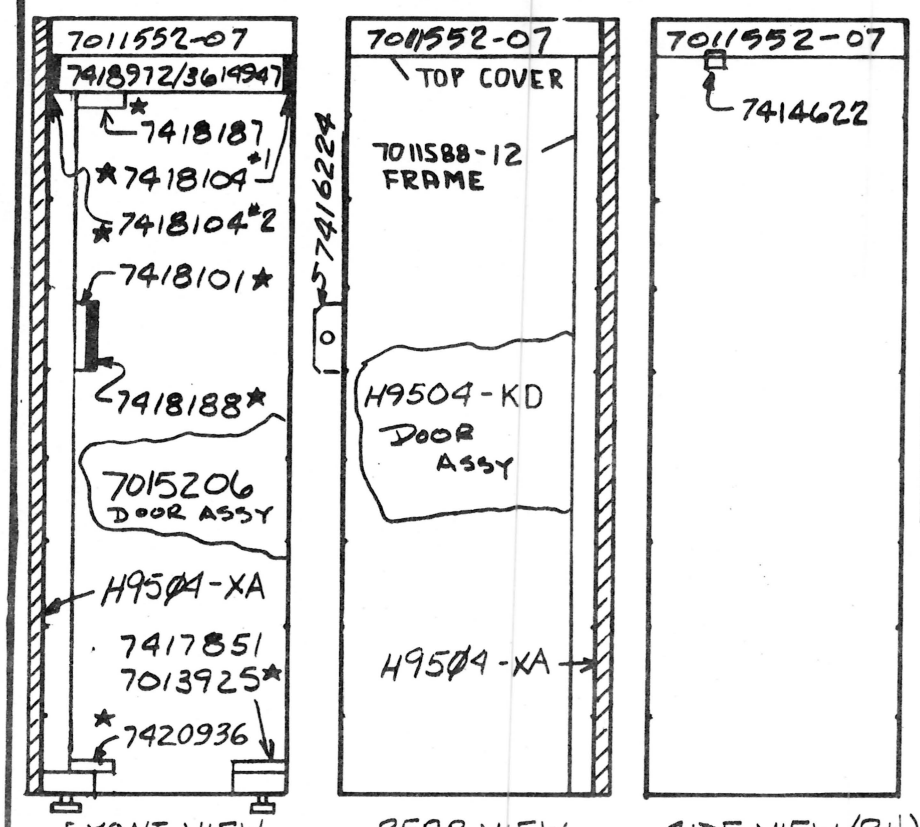

FRONT VIEW (★ SEE SKETCHES SHEET 11 & A-SP-7015551-0-1) REAR VIEW SIDE VIEW (R.H.)

CABINET STRUCTURE
(SEE SHEET 5 TABLE A)

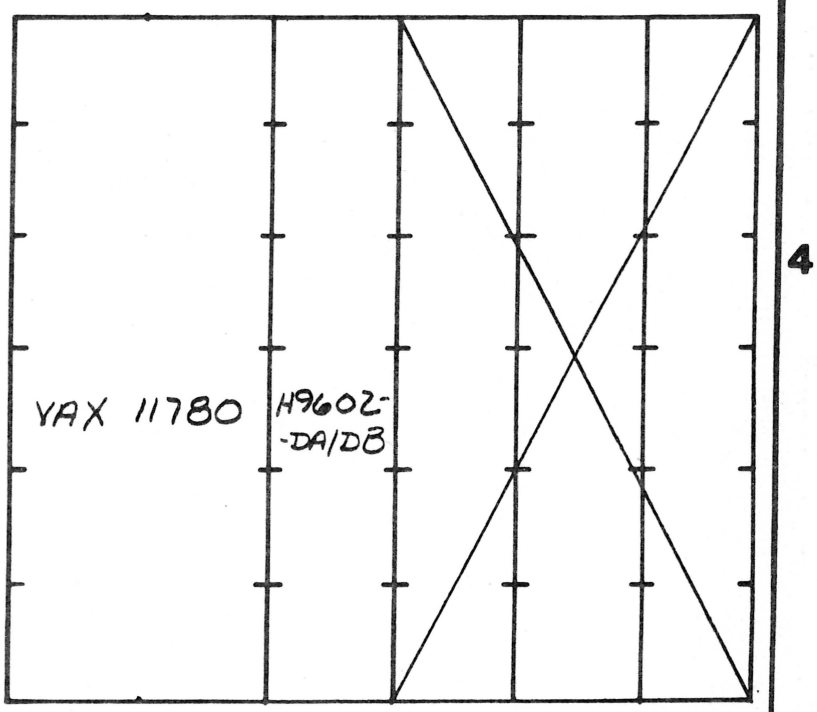

CABINET ARRANGEMENT

FREE STANDING UNITS

SOFTWARE

UNIBUS SEQUENCE

UNIBUS LOAD

UNIBUS LENGTH

REVISIONS			REF	CABINET FRAME (SWHB)	H9502	D	D			20
CHK	CHANGE NO.	REV.	1	FILLER STRIPS (INTER CAB)	H9504	XA	XA			19
			REF	MFG SPEC: ASSY PROCEDURE FOR H9602-DE	7015551-0	-1	-1			18
			** 1	SPRING REACT. ASSY	7416224	REF	REF			17
			1	PIVOT BUSHING	7417851-	00	00			16
			1	DOOR STOP WELDMENT	7013925-	01	01			15
			1	CATCH MOUNTING BRKT	7418101-	00	00			14
			1	CATCH, LOCKING	7418188-	00	00			13
			1	STRIKE PLATE, TOP FRONT	7418187-	00	00			12
			1	STRIKE PLATE, BOTTOM FR.	7420936-	00	00			11
			1	DECAL, CONSOLE	3614947-	00	00			10
			2	EXTRUSION MOUNTING BRKT	7418104-	00	00			9
			1	EXTRUSION, CONSOLE	7418972-	00	00			8
			1	FRONT DOOR	7015206-	00	00			7
										6
			1	LOCK STUD ASSY	7414622-	00	00			5
										4
			1	REAR DOOR ASSY	H9504-	KD	KD			3
			1	TOP COVER (SINGLE)	7011552-	07	07			2
			1	FRAME ASSY SWHB	7011588-	12	12			1
				SYSTEM - BASIC	H9602-	DA	DB			

NOTES

** PART OF ITEM* 3

QUANTITY	DESCRIPTION	DWG./PART NO.	VARIATION	ITEM NO.

TITLE VAX UNIBUS OPTION CONFIGURATION

SIZE B | CODE AR | NUMBER H9602-D-Ø | REV. D

SCALE NONE | SHEET 4 OF 12 | DIST.

H9602-D-Ø

EN-01119-16-N575-(325)

ORB 123

"THIS DRAWING AND SPECIFICATIONS, HEREIN, ARE THE PROPERTY OF DIGITAL EQUIPMENT CORPORATION AND SHALL NOT BE REPRODUCED OR COPIED OR USED IN WHOLE OR IN PART AS THE BASIS FOR THE MANUFACTURE OR SALE OF ITEMS WITHOUT WRITTEN PERMISSION.
COPYRIGHT ©1977, DIGITAL EQUIPMENT CORPORATION"

ARRANGEMENT

GUIDELINES

TABLE A (SEE NOTE 2)

	DESCRIPTION	MOUNTING HOLES (COUNTED FROM BOT.)	MOUNTING LOCATIONS	REMARKS
	861	3,7	FRONT	
	12-13092-00	12	INTERIOR	SEE E-AR-H95Ø2-Ø-Ø SH#2,3
MTG LOCATION DEPENDS ON SLIDES SUPPLIED	BA11-K #1	~~24, 26, 27~~ ~~19, 20, 22~~	FRONT to REAR	SLIDES 1211825-01 / SLIDES 1211825-02
	INTERLOCK INSTALLATION	D27 / D22	LEFT FRONT	SLIDES 1211825-01 / SLIDES 1211825-02
	74-11632 #1	35	RIGHT SIDE INTERIOR	
	74-15654 #1	50, 52	FRONT	BRACKET
	12-12173 #1	51	FRONT	ROD
*	BA11-K #2	~~62, 64, 65~~ ~~56, 57, 59~~	FRONT to REAR	SLIDES 1211825-01 / SLIDES 1211825-02
*	INTERLOCK INSTALLATION	D64 / D59	LEFT FRONT	SLIDES 1211825-01 / SLIDES 1211825-02
*	74-15654 #2	81, 83	FRONT	BRACKET
*	12-12173 #2	82	FRONT	ROD
	74-14167	6, 13	REAR	
	74-11632 #2	34	REAR	
	74-11632 #4	71	REAR	
*	74-20121	42, 46	RIGHT SIDE	H317 #3 (FRONT MTG FACING OUT)
*	74-20122	42, 46	LEFT SIDE	H317 #3 (FRONT MTG FACING OUT)
	7414386-00 #1	42, 46	LEFT SIDE	H317 #1 (REAR MTG FACING OUT)
	7414386-00 #2	42, 46	RIGHT SIDE	H317 #1 (REAR MTG FACING OUT)
*	7414386-00 #3	81, 85	LEFT SIDE	H317 #2 (REAR MTG FACING OUT)
*	7414386-00 #4	81, 85	RIGHT SIDE	H317 #2 (REAR MTG FACING OUT)
*	74-11632 #3	72	RIGHT SIDE INTERIOR	
	74-18101	57, 59	FRONT (L.H.)	
	74-18104 #1	2, 3 (FROM TOP)	FRONT (R.H.)	
	74-18104 #2	2, 3 (FROM TOP)	FRONT (L.H.)	
*	7012415-00	31, 37	REAR RIGHT INTERIOR	SUPPLIED W/ RK611
	7416224-00	61, 64	RIGHT REAR	

NOTES:
1 - * DENOTES OPTIONS.
2. - REF SEE SHEETS 2, 3, & 4

REVISIONS		
CHK	CHANGE NO.	REV.

TITLE	SIZE	CODE	NUMBER	REV.
VAX UNIBUS OPTION CONFIGURATION	B	AR	H96Ø2-D-Ø	D
SCALE —H—	SHEET 5 OF 12	DIST.		

EN-01120-16-N575-(325)

H96Ø2-D-Ø B AR D

"THIS DRAWING AND SPECIFICATIONS, HEREIN, ARE THE PROPERTY OF DIGITAL EQUIPMENT CORPORATION AND SHALL NOT BE REPRODUCED OR COPIED OR USED IN WHOLE OR IN PART AS THE BASIS FOR THE MANUFACTURE OR SALE OF ITEMS WITHOUT WRITTEN PERMISSION.
COPYRIGHT © 1977, DIGITAL EQUIPMENT CORPORATION"

ARRANGEMENT
GUIDELINES

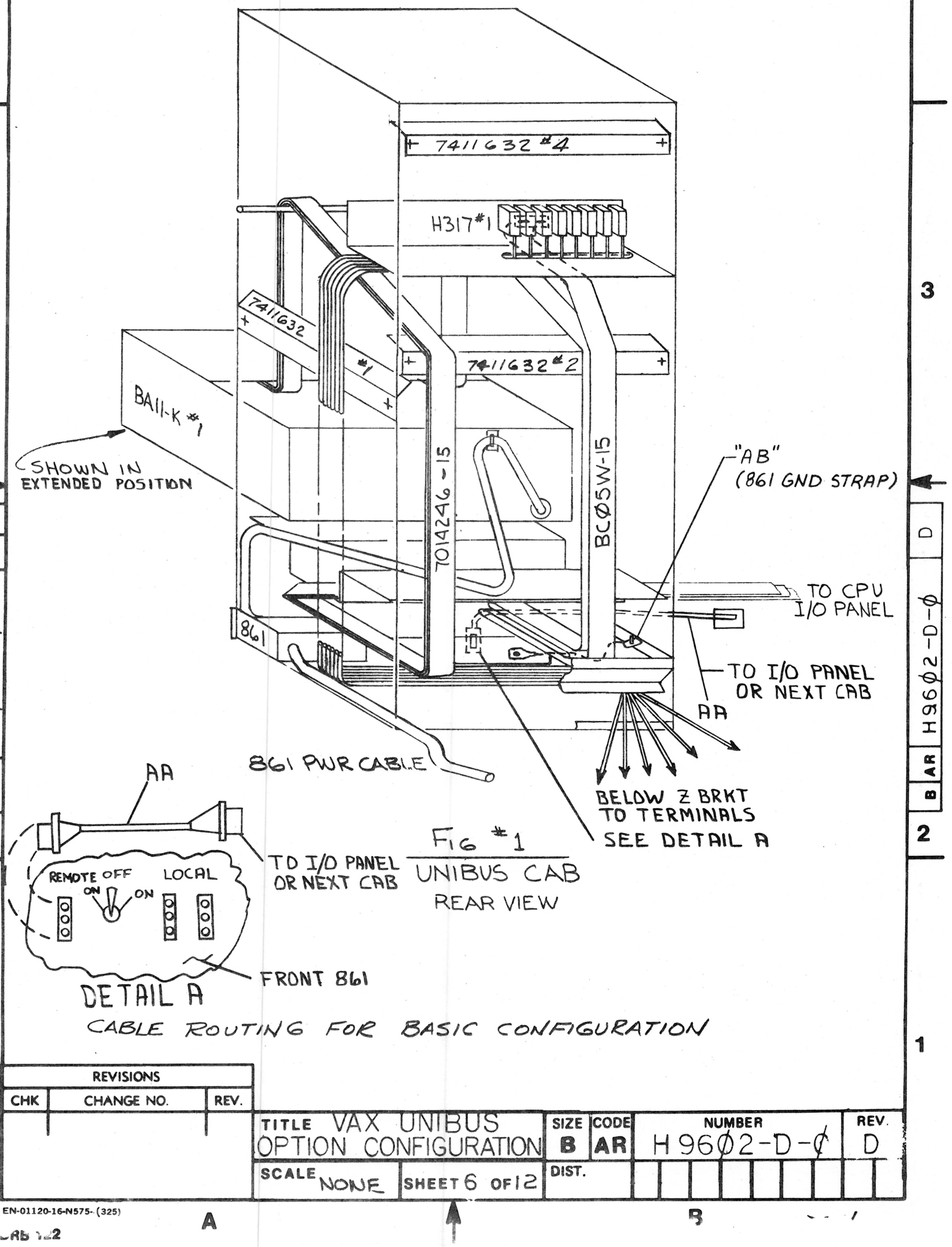

TO I/O PANEL OR NEXT CAB

Fig #1
UNIBUS CAB
REAR VIEW

CABLE ROUTING FOR BASIC CONFIGURATION

REVISIONS		
CHK	CHANGE NO.	REV.

TITLE VAX UNIBUS OPTION CONFIGURATION		SIZE B	CODE AR	NUMBER H9602-D-0 REV. D
SCALE NONE	SHEET 6 OF 12	DIST.		

EN-01120-16-N575-(325)

B AR H9602-D-0

D H9602-D-0 B AR

"THIS DRAWING AND SPECIFICATIONS, HEREIN, ARE THE PROPERTY OF DIGITAL EQUIPMENT CORPORATION AND SHALL NOT BE REPRODUCED OR COPIED OR USED IN WHOLE OR IN PART AS THE BASIS FOR THE MANUFACTURE OR SALE OF ITEMS WITHOUT WRITTEN PERMISSION.
COPYRIGHT © 1977, DIGITAL EQUIPMENT CORPORATION"

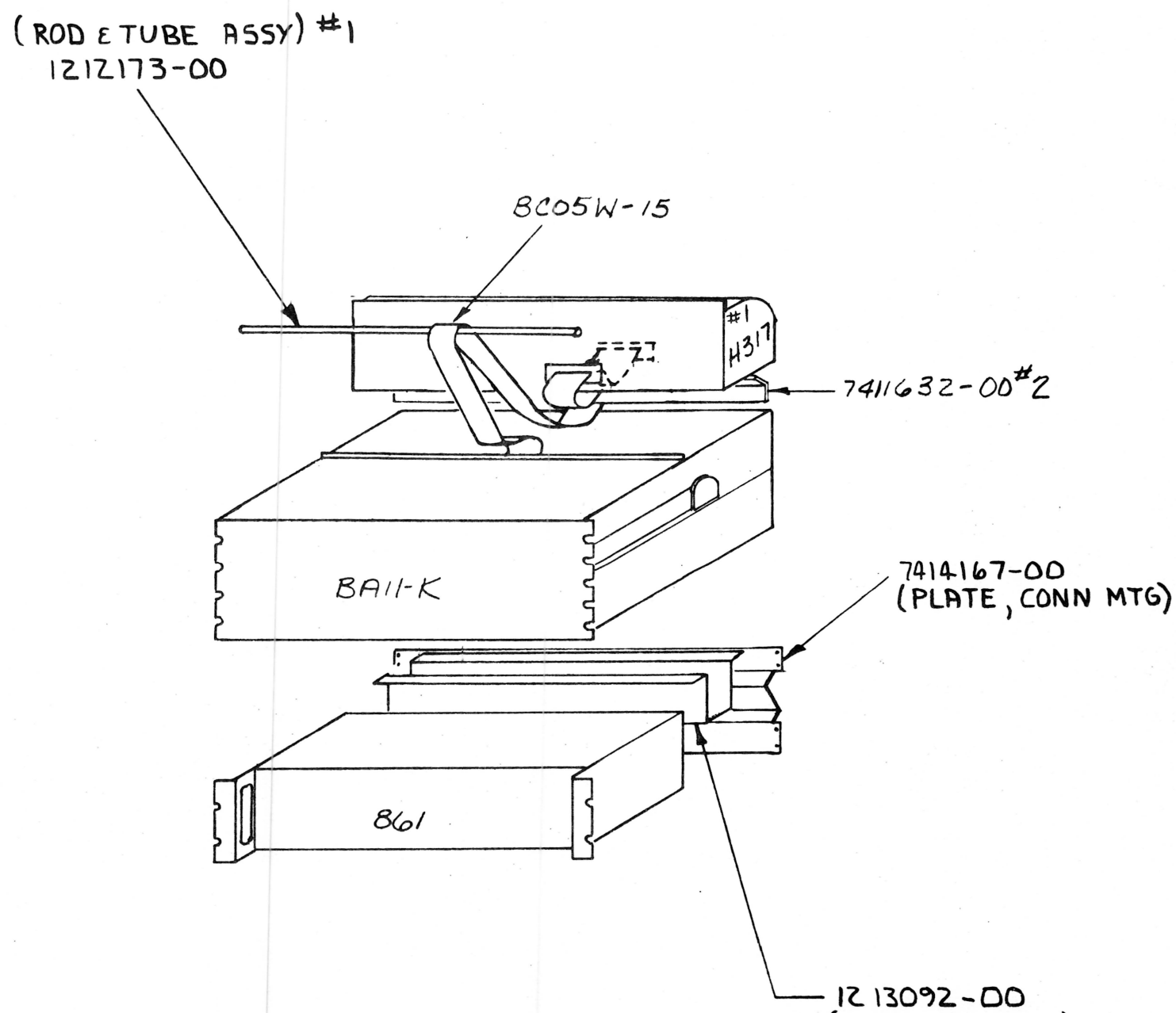

FIG II
FRONT VIEW
BASIC UNIBUS CONFIGURATION
(CABINET NOT SHOWN)

REVISIONS		
CHK	CHANGE NO.	REV.

TITLE VAX UNIBUS OPTION CONFIGURATION	SIZE B	CODE AR	NUMBER H96Ø2-D-Ø	REV. D
SCALE —H—	SHEET 7 OF 12	DIST.		

EN-01120-16-N575- (325)
DRB 122

"THIS DRAWING AND SPECIFICATIONS, HEREIN, ARE THE PROPERTY OF DIGITAL EQUIPMENT CORPORATION AND SHALL NOT BE REPRODUCED OR COPIED OR USED IN WHOLE OR IN PART AS THE BASIS FOR THE MANUFACTURE OR SALE OF ITEMS WITHOUT WRITTEN PERMISSION.
COPYRIGHT ©1977, DIGITAL EQUIPMENT CORPORATION"

NOTE: CABLES ARE TO BE CENTERED BEHIND BA11-K BOXES WHEN PASSING BEHIND THEM. CABLES SHOWN SPREAD-OUT FOR DRAWING CLARITY ONLY.

NOTE:
EXAMPLE CABLE ROUTING FOR FULL CONFIGURATION.
DUPLICATE CABLING NOT SHOWN.

ARRANGEMENT
GUIDELINES

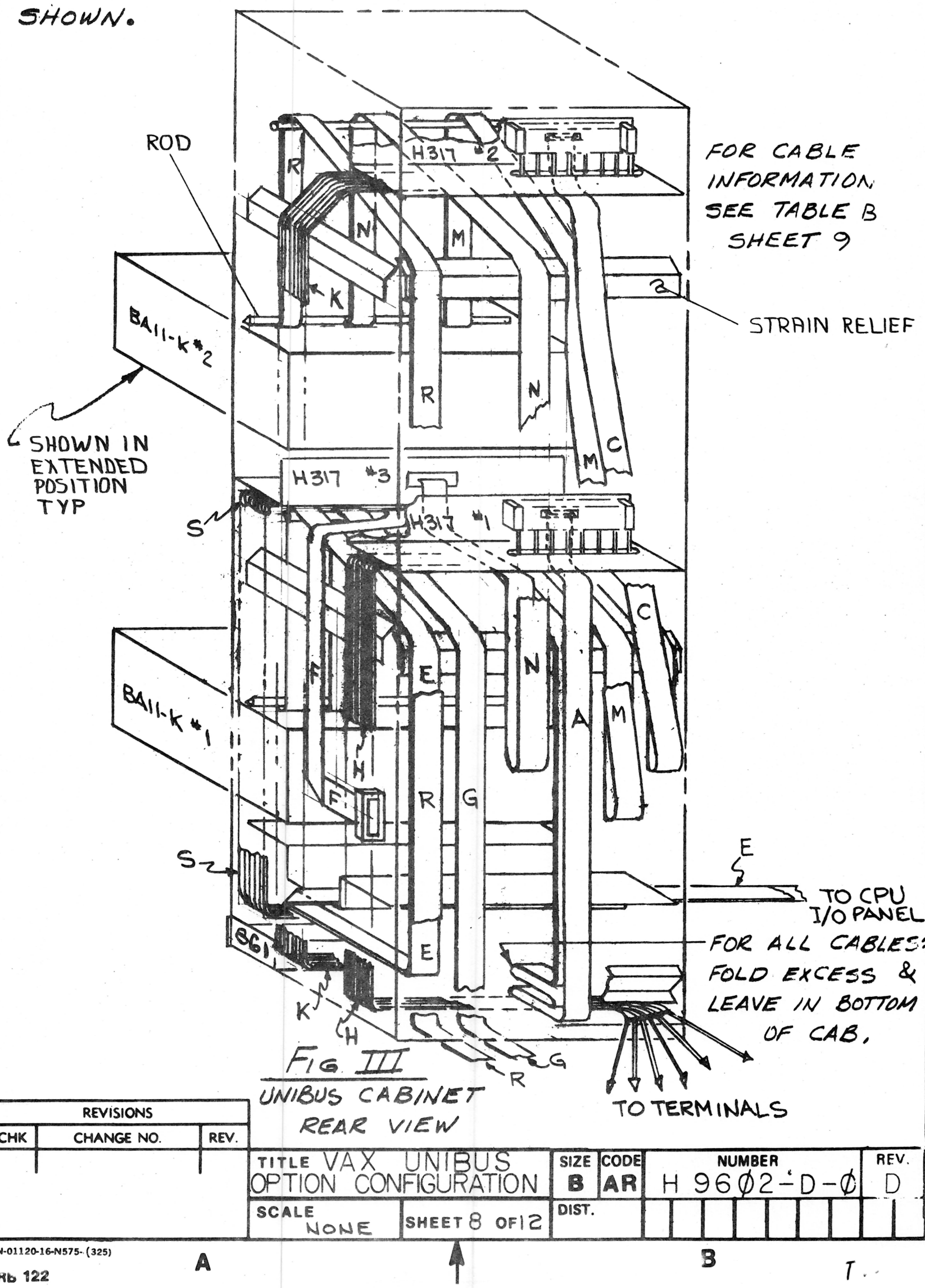

FIG. III
UNIBUS CABINET
REAR VIEW

REVISIONS		
CHK	CHANGE NO.	REV.

TITLE VAX UNIBUS OPTION CONFIGURATION	SIZE B	CODE AR	NUMBER H9602-D-Ø	REV. D
SCALE NONE	SHEET 8 OF 12	DIST.		

EN-01120-16-N575- (325)
DRb 122
TW

"THIS DRAWING AND SPECIFICATIONS, HEREIN, ARE THE PROPERTY OF DIGITAL EQUIPMENT CORPORATION AND SHALL NOT BE REPRODUCED OR COPIED OR USED IN WHOLE OR IN PART AS THE BASIS FOR THE MANUFACTURE OR SALE OF ITEMS WITHOUT WRITTEN PERMISSION.
COPYRIGHT ©1977, DIGITAL EQUIPMENT CORPORATION"

◐ BCØ5W-15 PART OF DZ11-A
◒ BCØ8S-15 PART OF DZ11-C
⊗ CABLES PART OF BASIC H96Ø2-D
⊕ BC11A PART OF BA11-K
⊙ BCØ3M-A PART OF *7Ø15443
⊖ BCØ3M-A PART OF 7Ø1544A
□ RK611 PART OF RKØ6 (OPTIONAL)

ARRANGEMENT GUIDELINES

TABLE B

CABLE CONNECTIONS (SEE FIG. III SHT #8)

	CABLE SYM	CABLE Nº. REF	FROM CONNECTION		TO CONNECTION		REMARKS
◐	A	BCØ5W-15	BA11-K #1		H317E #1	J18	
◐	B	BCØ5W-15	BA11-K #1		H317E #1	J2Ø	NOT SHOWN
◐	C	BCØ5W-15	BA11-K #1		H317E #2	J18	
◐	D	BCØ5W-15	BA11-K #1		H317E #2	J2Ø	NOT SHOWN
⊗	E	7014246-15	BA11-K #1		CPU-I/O		CPU-I/O-PANEL 7013678
□	F	RK611	BA11-K #1		RKØ6		OPTIONAL
	G	AS REQ'D	BA11-K #1		PERIPHERALS		
⊗	H	BCØ3M-A (8)	H317E #1	J-1 TO J-8	TERMINALS		
	J	BCØ3M-A (8)	H317E #1	J-9 TO J-16	TERMINALS		NOT SHOWN
⊙	K	BCØ3M-A (8)	H317E #2	J-1 TO J-8	TERMINALS		
	L	BCØ3M-A (8)	H317E #2	J-9 TO J-16	TERMINALS		NOT SHOWN
⊕	M	BC11A-1Ø	BA11-K #2		BA11-K #1		SUPPLIED WITH BA11-K #2
◐	N	BCØ5W-15	BA11-K #2		H317E #3	J18	
◐	P	BCØ5W-15	BA11-K #2		H317E #3	J-2Ø	NOT SHOWN
	R	AS REQ'D	BA11-K #2		PERIPHERALS		
⊖	S	BCØ3M-A (8)	H317E #3	J-1 TO J-8	TERMINALS		
	T	BCØ3M-A (8)	H317E #3	J-9 TO J-16	TERMINALS		NOT SHOWN
	U	AS REQ'D	BA11-K #1		7414167-00		NOT SHOWN ROUTED SAME AS G
	V	AS REQ'D	BA11-K #2		7414167-00		NOT SHOWN ROUTED SAME AS R
◒	W	BCØ8S-15	BA11-K		H317-F	J1	NOT SHOWN, ROUTED SAME AS B,D,P
◒	X	BCØ8S-15	BA11-K		H317-F	J2	NOT SHOWN, ROUTED SAME AS A,C,N,
	Y	AS REQ'D	H317-F	1LØ TO 1L7	TERMINALS		NOT SHOWN, ROUTED SAME AS J,L,T
	Z	AS REQ'D	H317-F	2LØ TO 2L7	TERMINALS		NOT SHOWN, ROUTED SAME AS H,K,S,
⊗	AA	7008288-05	861		CPU CAB TO CAB I/O PANEL		SEE SHEET #6
	AB	7415578-01	861	GND STUD	UNIBUS CAB L.H. LOWER LAT.	GND STUD	SEE SHEET #6

TABLE B AND NOTES CONTINUED ON SHEET #10

REVISIONS		
CHK	CHANGE NO.	REV.

TITLE VAX UNIBUS OPTION CONFIGURATION	SIZE B	CODE AR	NUMBER H96Ø2-D-Ø	REV D
SCALE NONE	SHEET 9 OF 12	DIST.		

EN-01120-16-N575-(325)
DNB 12Z

"THIS DRAWING AND SPECIFICATIONS, HEREIN, ARE THE PROPERTY OF DIGITAL EQUIPMENT CORPORATION AND SHALL NOT BE REPRODUCED OR COPIED OR USED IN WHOLE OR IN PART AS THE BASIS FOR THE MANUFACTURE OR SALE OF ITEMS WITHOUT WRITTEN PERMISSION.
COPYRIGHT © 1977, DIGITAL EQUIPMENT CORPORATION"

ARRANGEMENT
GUIDELINES

TABLE B (CONTINUED)

CABLE CONNECTIONS (SEE FIG III SHT #8)

CABLE SYM	CABLE Nº. REF	FROM CONNECTION		TO CONNECTION		REMARKS

NOTES:

1. ANY CONFIGURATION: ALL CABLES FROM ANY BA11-K BOX MUST GO OVER ROD & TUBE ASSY & THRU A STRAIN RELIEF BEFORE GOING TO DESTINATION.
2. ROUTING FROM BA11-K (#2) TO H317 (#2) SAME AS ROUTING FROM BA11-K (#1) TO H317 (#1)

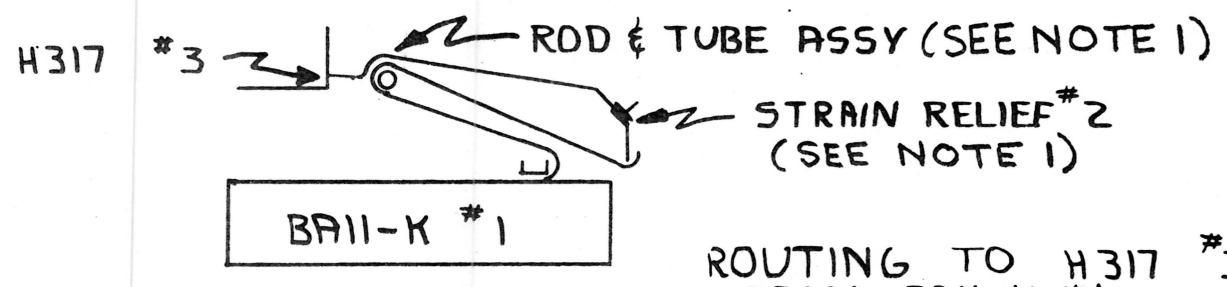

FIG IV

ROUTING TO H317 #3
FROM BA11-K #1

REVISIONS								
CHK	CHANGE NO.	REV.	TITLE VAX UNIBUS OPTION CONFIGURATION	SIZE B	CODE AR	NUMBER H9602-D-Ø	REV. D
			SCALE —	SHEET 10 OF 12	DIST.		

EN-01120-16-N575-(325)

B AR H9602-D-Ø D

"THIS DRAWING AND SPECIFICATIONS, HEREIN, ARE THE PROPERTY OF DIGITAL EQUIPMENT CORPORATION AND SHALL NOT BE REPRODUCED OR COPIED OR USED IN WHOLE OR IN PART AS THE BASIS FOR THE MANUFACTURE OR SALE OF ITEMS WITHOUT WRITTEN PERMISSION.
COPYRIGHT ©1977, DIGITAL EQUIPMENT CORPORATION"

FOR ITEM Nº's SHOWN SEE A-PL-H96Ø2-D-Ø
FOR ASSY PROCEDURE FOR CAB SEE A-SP-7015551-0-1

ARRANGEMENT
GUIDELINES

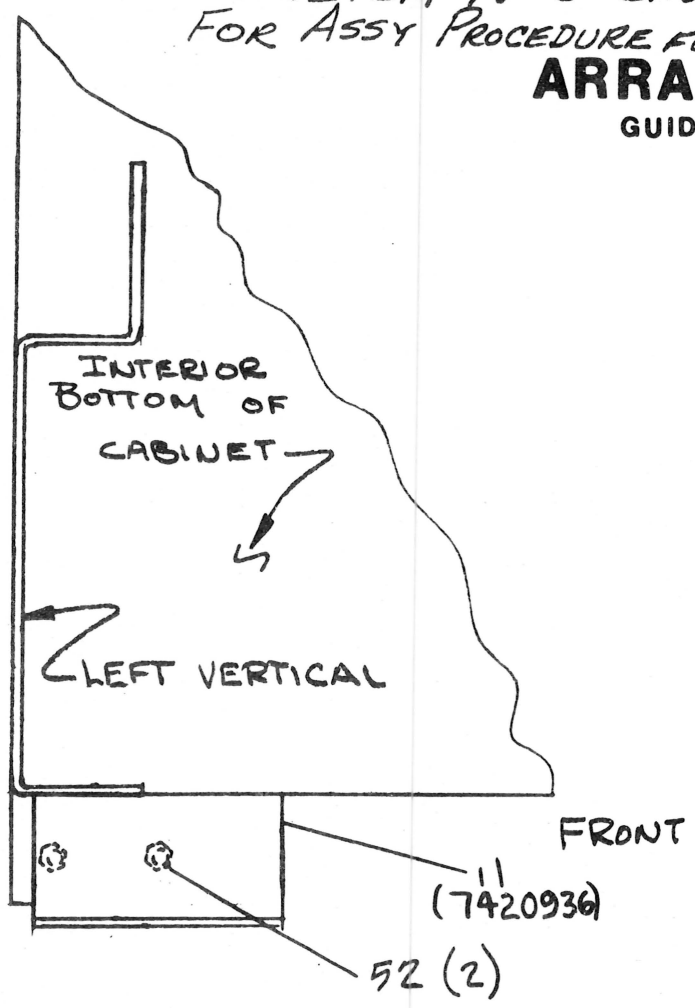

FIG. VI SEE SHEET 4

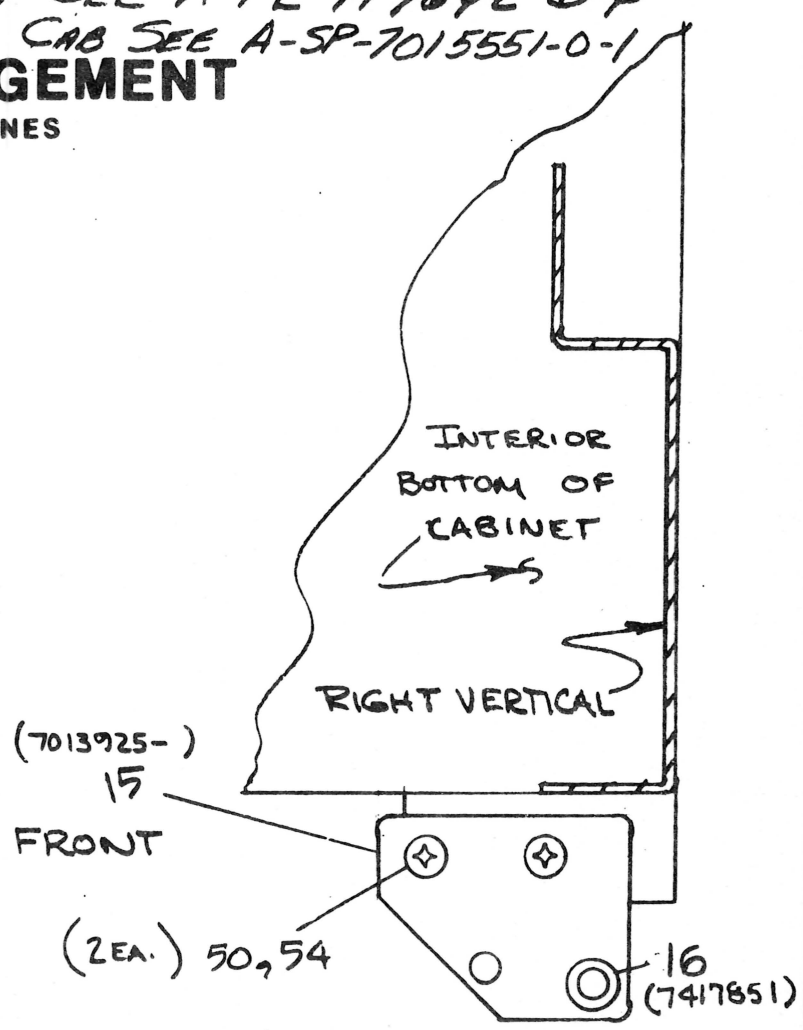

FIG. VII SEE SHEET 4

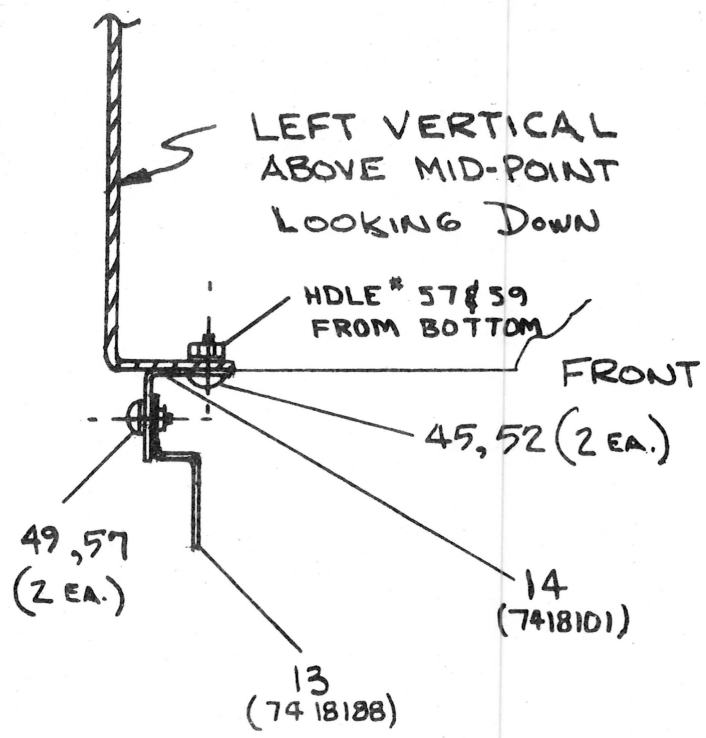

FIG. VIII SEE SHEET 4&5

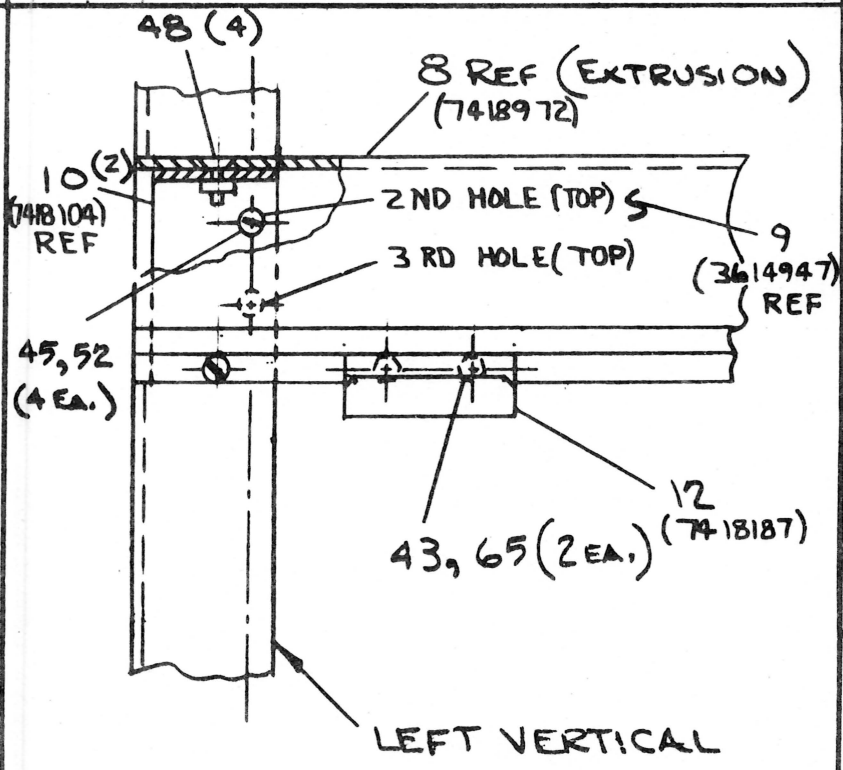

FIG. IX SEE SHEET 4&5
VIEW FACING UPPER LEFT FRONT OF CABINET

REVISIONS		
CHK	CHANGE NO.	REV.

TITLE VAX UNIBUS OPTION CONFIGURATION	SIZE B	CODE AR	NUMBER H96Ø2-D-Ø	REV. D
SCALE NONE	SHEET 11 OF 12	DIST.		

EN-01120-16-N575- (325)
DRB 122

"THIS DRAWING AND SPECIFICATIONS, HEREIN, ARE THE PROPERTY OF DIGITAL EQUIPMENT CORPORATION AND SHALL NOT BE REPRODUCED OR COPIED OR USED IN WHOLE OR IN PART AS THE BASIS FOR THE MANUFACTURE OR SALE OF ITEMS WITHOUT WRITTEN PERMISSION.
COPYRIGHT ©1977, DIGITAL EQUIPMENT CORPORATION"

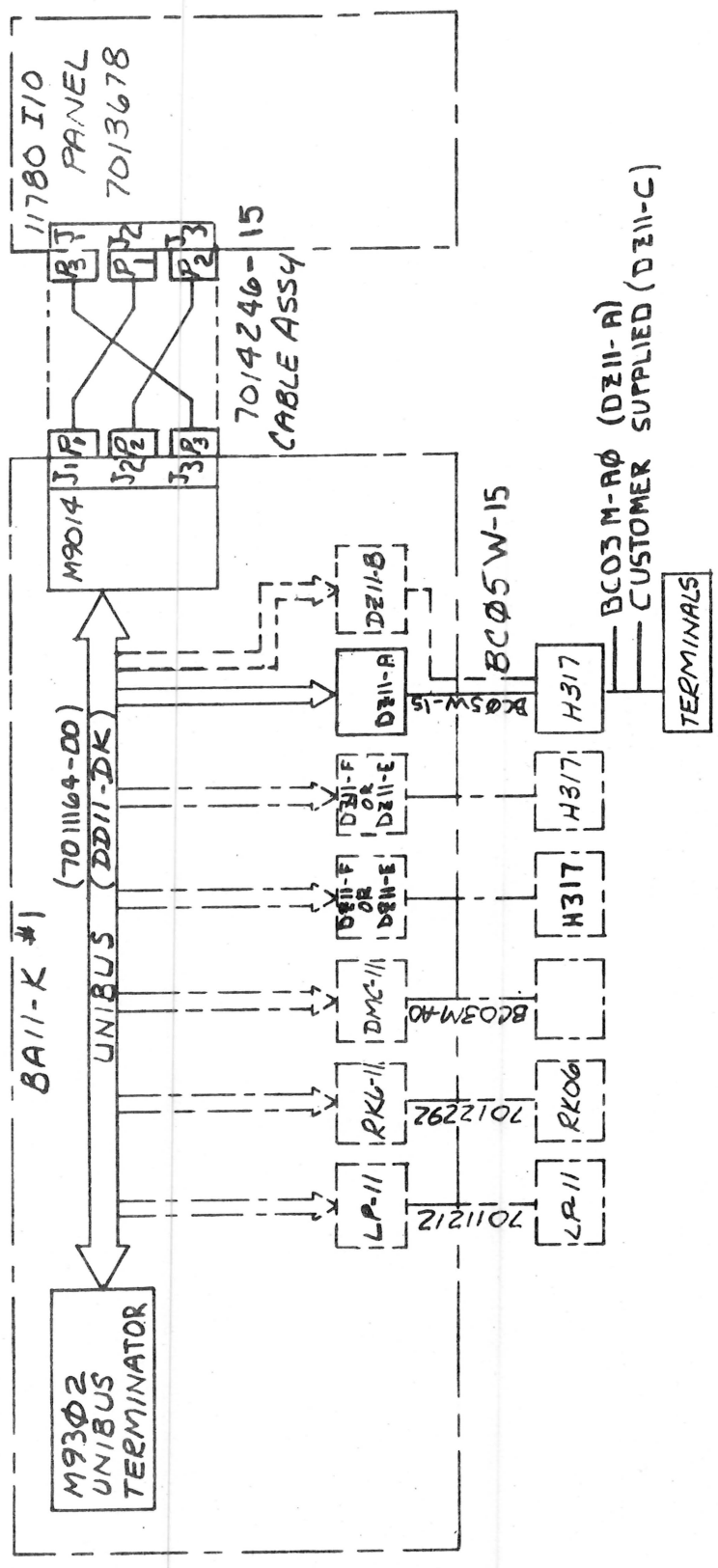

NOTE: THIS INTERCONNECTION DIAGRAM NOT TO BE USED FOR BUS SEQUENCING

FIG. V

INTERCONNECTION DIAGRAM

REVISIONS		
CHK	CHANGE NO.	REV.

TITLE VAX UNIBUS OPTION CONFIGURATION		SIZE B	CODE AR	NUMBER H96Ø2-D-Ø
SCALE —// —	SHEET 12 OF 12	DIST.		REV. D

EN-01120-16-N575- (325)

DRB 122

DIGITAL EQUIPMENT CORPORATION
MAYNARD, MASSACHUSETTS
PARTS LIST

MADE BY Ray Belanger	CHECKED D. Healy	SECTION
DATE 12/19/77	DATE 11 JAN 78	
ENG D. Belanger	PROD Bob Smith	ISSUED SECT.
DATE 26 JAN 78	DATE 26 JAN 78	

ITEM NO.	DWG NO./PART NO.	DESCRIPTION	QUANTITY VARIATION -DA (115V)	-DB (230V)				-DF	-DH		-DJ (120V)	-DK (230V)		
1	E-AD-7011588-12-0	Frame Assembly, Single Hi-boy	1	1				1	1		-	-		
3	A-PL-H9504-XA-Ø	Filler Strips (Intercab)	1	1				1	1		-	-		
4	E-IA-7011552-07-0	Top Cover Assembly (Hi-boy)	1	1				1	1		-	-		
5	C-IA-7414622-0-0	Lock Stud Assembly (Top Cover)	1	1				1	1		-	-		
6	A-PL-H9504-KD-Ø	Rear Door Assembly (Hi-boy)	1	1				1	1		-	-		
7	E-AD-7015206-0-0	Front Door Assembly	1	1				1	1		-	-		
8	D-MD-7418972-0-0	Extrusion, Console	1	1				1	1		-	-		
9	A-PS-3614947-0-0	Decal, Console	1	1				1	1		-	-		
10	C-IA-7418104-0-0	Extrusion Mtg. Bracket	2	2				2	2		-	-		
11	C-IA-7420936-0-0	Strike Plate, Bottom Front	1	1				1	1		-	-		
12	C-IA-7418187-0-0	Strike Plate, Top Front	1	1				1	1		-	-		
13	C-IA-7418188-0-0	Catch, Locking	1	1				1	1		-	-		
14	C-MD-7418101-0-0	Catch Mtg. Bracket	1	1				1	1		-	-		
15	B-IA-7013925-01-0	Door Stop, Weldment	1	1				1	1		-	-		
16	B-MD-7417851-0-0	Pivot Bushing	1	1				1	1		-	-		
17	E-UA-861-C-0	Power Control (1Ø, 115V, 60 Hz)	1	-				1	-		-	-		
18	E-UA-861-B-0	Power Control (1Ø, 230V, 50 Hz)	-	1				-	1		-	-		
19	E-UA-BA11-KE-Ø	Unit Assembly, BA11-K (115V)	1	-				-	-		-	-		
20	E-UA-BA11-KF-Ø	Unit Assembly, BA11-K (230V)	-	1				-	-		-	-		
21	D-IA-7414167-0-0	Plate, Conn. Mtg.	1	1				-	-		-	-		
22	B-MD-7414197-0-0	Plate, Cover	8	8				-	-		-	-		

TITLE	ASSY NO.	SIZE	CODE	NUMBER	REV	ECO NO.
VAX UNIBUS OPTION CONFIGURATION	B-AR-H96Ø2-D-Ø	A	PL	H96Ø2-D-Ø	C	H96Ø2-D TW003
	SHEET 1 OF 4	DIST				

DEC FORM DRA 110

TW

DIGITAL EQUIPMENT CORPORATION
MAYNARD, MASSACHUSETTS
PARTS LIST

MADE BY Ray Belanger	CHECKED D. Healy	SECTION
DATE 12/19/77	DATE 11 JAN 78	
ENG D. Belanger	PROD Bob Smith	ISSUED SECT.
DATE 26 JAN 78	DATE 26 JAN 78	

ITEM NO.	DWG NO./PART NO.	DESCRIPTION	QUANTITY VARIATION -DA (115V)	-DB (230V)				-DF (115V)	-DH (230V)		-DJ (120V)	-DK (230V)		
23	C-IA-7411632-0-0	Strain Relief	3	3				-	-		-	-		
24	C-IA-7411633-0-0	Clamp, Strain Relief	3	3				-	-		-	-		
25	D-PS-1211825-00	Slide, 3 Pos. Tilt (Pair) SUPPLIED	REF	REF				-	-		-	-		
		WITH ITEM 19 OR 20).												
26	A-PS-1212173-0-0	Rod & Tube Assembly (Set)	1	1				-	-		-	-		
27	C-MD-7415654-0-0	Support, Roller	1	1				-	-		-	-		
28	D-UA-DZ11-A-Ø	Unit Assembly DZ11	1	1				-	-		-	-		
29	C-MD-7414386-0-0	Bracket, Panel (Supplied with Item 28)	REF	REF				-	-		-	-		
30	D-UA-H317-E-Ø	H317 Cable Box Assembly (Supplied with	REF	REF				-	-		-	-		
		Item 28)												
31	C-AD-7011164-0-0	Backplane Assembly (DD11-DK)	1	1				-	-		-	-		
32	A-PL-G727-Ø-Ø	Grant Continuity	8	8				-	-		-	-		
33	D-UA-M9Ø14-Ø-Ø	Adapter Board	1	1				-	-		-	-		
34	D-CS-M93Ø2-Ø-1	Unibus Terminator	1	1				-	-		-	-		
35	E-PS-1213092-00	Trough, Cable	1	1				-	-		-	-		
36	B-MD-7413664-0-0	Bracket, Locking	2	2				-	-		-	-		
37	E-AD-7013688-00	Interlock Kit L.H. (Mark III) (Supplied	REF	REF				REF	REF		-	-		
		with Item 1)												
38	D-AD-7014246-15-0	Cable Assembly, Internal Unibus	1	1				-	-		-	-		
39	A-PS-1209351-03	Connector Housing, Male (Mate-N-Lok)	1	1				-	-		-	-		
40	A-PS-1209378-01	Terminal, Pin Contact	2	2				-	-		-	-		
41	A-DC-7409872-2-0	Decals, Power Harness (SUPPLIED/ITEM 38)	REF	REF				-	-		-	-		

TITLE	ASSY NO.	SIZE	CODE	NUMBER	REV	ECO NO.
VAX UNIBUS OPTION CONFIGURATION	B-AR-H96Ø2-D	A	PL	H96Ø2-D-Ø	C	
	SHEET 2 OF 4	DIST				

DEC FORM

TW

DIGITAL EQUIPMENT CORPORATION
MAYNARD, MASSACHUSETTS
PARTS LIST

MADE BY Ray Belanger	CHECKED D. Healy	SECTION
DATE 12/19/77	DATE 11 JAN 78	
ENG D. Belanger	PROD Bob Smith	ISSUED SECT.
DATE 26 JAN 78	DATE 26 JAN 78	

ITEM NO.	DWG NO./PART NO.	DESCRIPTION	QUANTITY VARIATION -DA (115V)	-DB (230V)				-DF (115V)	-DH (230V)		-DJ (120V)	-DK (230V)		
41	D-AD-7017416-0-0	COMMUNICATIONS CAB ASSY (120 V)	-	-				-	-		1	-		
42	9006020-01	SCR, Phillips Pan Hd. Mach. 6-32 X .25	16	16				-	-		-	-		
43	9006022-01	SCR, Phillips Pan Hd. Mach. 6-32 x .38	2	2				2	2		-	-		
44	9006043-03	SCR, Phillips TRUSS HD Mach 8-32 x 1.00	4	4				-	-		-	-		
45	9006071-03	SCR, Phillips Truss Hd. Mach. 10-32 x .38	10	10				6	6		-	-		
46	9006073-03	SCR, Phillips Truss Hd. Mach. 10-32 x .50	33	33				-	-		-	-		
47	9006078-03	SCR, Phillips Truss Hd. Mach. 10-32 x 1.25	2	2				-	-		-	-		
48	9006073-02	SCR, Phillips Flat Hd. Mach. 10-32 x .50	8	8				4	4		-	-		
49	9006037-03	SCR, Phillips Truss Hd. Mach 8-32 x .38	2	2				2	2		-	-		
50	9006056-03	SCR, Phillips Truss Hd. Mach. 1/4-20 x .50	2	2				2	2		-	-		
51	D-AD-7017416-1-0	COMMUNICATIONS CAB. ASSY (230V)	-	-				-	-		-	1		
52	9006565-00	Nut Kep 10-32	12	12				8	8		-	-		
53	9007786-00	Nut, Tinnerman 10-32	38	38				-	-		-	-		
54	9008203-00	Nut Kep 1/4-20	2	2				2	2		-	-		
55	9006633-00	Washer, Internal Lock #6	16	16				-	-		-	-		
56	9007651-00	Washer, External Tooth Lock #10	37	37				-	-		-	-		
57	9008151-00	Washer, External Tooth Lock #8	6	6				2	2		-	-		
58	9007036-00	Grommet, CATERPILLAR	A/R	A/R				-	-		-	-		
59	9008228-00	Foam, Adhesive Back, Vinyl (Supplied with	REF	REF				-	-		-	-		
		Item 38)												
60	9009255-00	Label, I.D. (Supplied with Item 38)	REF	REF				-	-		-	-		
61	9009507-00	Tape, Vinyl (Supplied with Item 38)	REF	REF				-	-		-	-		

TITLE	ASSY NO.	SIZE	CODE	NUMBER	REV	ECO NO.
VAX UNIBUS OPTION CONFIGURATION	B-AR-H96Ø2-D	A	PL	H96Ø2-D-Ø	C	
	SHEET 3 OF 4	DIST				

DEC FORM DRA 110

TW

DIGITAL EQUIPMENT CORPORATION
MAYNARD, MASSACHUSETTS
PARTS LIST

MADE BY Ray Belanger	CHECKED D. Healy	SECTION
DATE 12/19/77	DATE 11 JAN 78	
ENG D. Belanger	PROD Bob Smith	ISSUED SECT.
DATE 26 JAN 78	DATE 26 JAN 78	

ITEM NO.	DWG NO./PART NO.	DESCRIPTION	QUANTITY VARIATION -DA (115V)	-DB (230V)				-DF	-DH		-DJ (120V)	-DK (230V)		
62	D-UA-BCØ5L-15-0	CABLE, JUMPER (SUPPLIED WITH ITEM 38	REF	REF				-	-		-	-		
63	9107360-00	Wire, 18 AWG Black (5" Long)	1	1				-	-		-	-		
64	9905128-01	Bag, 1 1/2 Bay	1	1				1	1		-	-		
65	9007649-00	WASHER, EXT. TOOTH LOCK #6	2	2				2	2		-	-		
66	A-PL-7015443-00-0	DZ 11-A EXPANSION KIT, REAR MTG(EIA)	REF	REF				-	-		-	-		
67	A-PL-7015443-01-0	DZ 11-C EXPANSION KIT, REAR MTG(20 MA)	REF	REF				-	-		-	-		
68	A-PL-7015444-00-0	DZ 11-A EXPANSION KIT, FRONT MTG(EIA)	REF	REF				-	-		-	-		
69	A-PL-7015444-01-0	DZ 11-C EXPANSION KIT, FRONT MTG(20 MA)	REF	REF				-	-		-	-		
70	A-PL-7015445-00-0	BA11-K EXPANSION KIT 115V 60 HZ	REF	-				-	-		-	-		
71	A-PL-7015445-01-0	BA11-K EXPANSION KIT 230V 50 HZ	-	REF				-	-		-	-		
72	D-CA-BCØ3M-AØ-Ø	CORD EXTENSION NULL MODEM	REF	REF			(SEE NOTE BELOW)				-	-		
73		CUSTOMER SUPPLIED CABLE	REF	REF			(SEE NOTE BELOW)				-	-		
74	C-IA-7008288-05-0	CABLE ASSY.	1	1				-	-		-	-		
75	E-AR-H95Ø2-D -Ø	Option Arrangement	REF	REF				REF	REF		-	-		
76	E-AR-H96Ø2-D-Ø	VAX Unibus Option Configuration	REF	REF				REF	REF		-	-		
77	A-SP-H96Ø2-D-2	Unibus Cab Assembly Procedure (Mfg.	REF	REF				REF	REF		-	-		
		Spec.)												
78	C-IA-7415578-01	STRAP GROUND 12.50" LG	1	1				1	1		-	-		
		NOTE: FOR CUSTOMER REQUIREMENTS ON ITEMS												
		72 & 73 SEE D-BD-DZ11-Ø-8 & B-AR-H96Ø2-D-Ø												
		SH. #8, 9 & 10												

TITLE	ASSY NO.	SIZE	CODE	NUMBER	REV	ECO NO.
VAX UNIBUS OPTION CONFIGURATION	B-AR-H96Ø2-D	A	PL	H96Ø2-D-Ø	C	
	SHEET 4 OF 4	DIST				

DEC FORM DRA 110

W

DIGITAL EQUIPMENT CORPORATION
MAYNARD, MASSACHUSETTS
PARTS LIST

MADE BY Ray Belanger DATE 12/20/77	CHECKED D.HEALY DATE 10 Jan. 78	SECTION 1
ENG D. Belanger DATE 26 JAN 78	PROD Bob Smith DATE 26 JAN 78	ISSUED SECT. 1

ITEM NO.	DWG NO./PART NO.	DESCRIPTION	QUANTITY VARIATION -00 (EIA)	QUANTITY VARIATION -01 (20 MA)
1	D-UA-DZ11-A-Ø	Unit Assembly DZ11	1	-
2	C-IA-7411632-0-0	Strain Relief	1	1
3	C-IA-7411633-0-0	Clamp, Strain Relief	1	1
4	9006071-03	SCR, Phillips Truss HD. Mach. #10-32 x	4	4
		.38		
5	9006073-02	SCR, Phillips Flat Hd. Mach. #10-32 x	4	4
		.50		
6	9006073-03	SCR, Phillips Truss Hd. Mach. #10-32	2	2
		x .50		
7	9006565-00	Nut, Kep #10-32	4	4
8	9007786-00	Nut, Tinnerman #10-32	6	6
9	9007651-00	Washer, Ext. Tooth Lock #10	2	2
10	B-AR-H96Ø2-D-Ø	VAX Unibus Option Configuration	REF	REF
11	A-SP-7015443-0-1	Mfg. Spec. - Addition of H317 #2	REF	REF
12	D-IA-BCØ5M-AØ-Ø	CORD EXTENSION NULL MODEM	REF	-
13	D-UA-DZ11-C-Ø	UNIT ASSY DZ11	-	1
14		CUSTOMER SUPPLIED CABLE	-	REF
		NOTE: FOR CABLE REQUIREMENTS ON ITEM #12 & #14		
		SEE D-BD-DZ11-Ø-8 & B-AR-H96Ø2-D-Ø SHEET #8,9 & 10.		

TITLE	ASSY NO.	SIZE	CODE	NUMBER	REV	ECO NO.
DZ11 EXPANSION KIT, REAR MOUNTING	B-DD-H96Ø2-D-Ø	A	PL	7015443-0-0		
	SHEET 1 OF 1	DIST				

DEC FORM
DRA 110

DIGITAL EQUIPMENT CORPORATION
MAYNARD, MASSACHUSETTS
PARTS LIST

MADE BY RAY BELANGER DATE 12/20/77	CHECKED D.HEALY DATE 11 Jan 78	SECTION 1
ENG O. Belanger DATE 26 JAN 78	PROD Bob Smith DATE 26 JAN 78	ISSUED SECT. 1

ITEM NO.	DWG NO./PART NO.	DESCRIPTION	QUANTITY VARIATION -00 (EIA)	-01 (20MA)
1	D-UA-DZ11-A-Ø	UNIT ASSEMBLY DZ11	1	-
2	C-MD-7420121-0-0	BRACKET, PANEL (R.H.)	1	1
3	C-MD-7420122-0-0	BRACKET, PANEL (L.H.)	1	1
4	9006071-03	SCR, PHILLIPS TRUSS HD. MACH. #10-32X38	4	4
5				
6	B-AR-H96Ø2-D-Ø	AX UNIBUS OPTION CONFIGURATION	REF	REF
7	A-SP-7015444-0-1	MFG. SPEC. ADDITION OF H317 #3	REF	REF
8	9006565-00	NUT KEP 10-32	2	2
9	9006073-03	SCR, PHL TRUSS HD. MACH. 10.32X.50	4	4
10	D-IA-BCØ3M-AØ-Ø	CORD EXTENSION NULL MODEM	REF	-
11	D-UA-DZ11-C-Ø	UNIT ASSY DZ11	-	1
12		CUSTOMER SUPPLIED CABLE	-	REF
		NOTE: FOR CUSTOMER REQUIREMENTS ON ITEMS 10 & 12 SEE D-BD-DZ11-Ø-8 & B-AR-H96Ø2 SH. #8, 9, & 10		

TITLE	ASSY NO.	SIZE	CODE	NUMBER	REV	ECO NO.
DZ11 EXPANSION KIT, FRONT MTG.	B-AR-H96Ø2-D-Ø	A	PL	7015444-0-0		
	SHEET 1 OF 1	DIST				

DEC FORM
DRA 110

DIGITAL EQUIPMENT CORPORATION
MAYNARD, MASSACHUSETTS
PARTS LIST

MADE BY Ray Belanger DATE 12/19/77	CHECKED D. HEATH DATE 27 JAN 78	SECTION 1
ENG N. Belanger DATE 26 JAN 78	PROD Bob Smith DATE 26 JAN 78	ISSUED SECT. 1

ITEM NO.	DWG NO./PART NO.	DESCRIPTION	QUANTITY VARIATION -00 (115V)	-01 (230V)
1	E-UA-BA11-KE-Ø	Unit Assembly, BA11-K (115V)	1	-
2	E-UA-BA11-KF-Ø	Unit Assembly, BA11-K (230V)	-	1
3	D-PS-1211825-00	Slide, 3 Pos. Tilt (Pair)	REF	REF (SUPPLIED W/ITEM 1 OR 2)
4	A-PS-1212173-00	Rod & Tube Assembly (Set)	1	1
5	E-AD-7013688-00-O	Interlock Kit (Mark III) L.H.	1	1
6	B-MD-7413664-00-O	Bracket, Locking	2	2
7	C-MD-7415654-00-O	Support, Roller	1	1
8	9006073-03	SCR Phillips Truss Hd. Mach. #10-32 x .50	13	13
9	9006078-03	SCR Phillips Truss Hd. Mach. #10-32 x	2	2
		1.25		
10	9007651-00	Washer, External Tooth Lock #10	17	17
11	9007786-00	Nut Tinnerman #10-32	14	14
12	B-AR-H96Ø2-D-Ø	VAX Unibus Option Configuration	REF	REF
13	A-SP-7015445-0-1	Mfg. Spec. - Addition of BA11-K	REF	REF

TITLE	ASSY NO.	SIZE	CODE	NUMBER	REV	ECO NO.
BA11-K EXPANSION KIT	B-DD-H96Ø2-D-Ø	A	PL	7015445-0-0		
	SHEET 1 OF 1	DIST				

DEC FORM
DRA 110

digital EQUIPMENT CORPORATION MAYNARD MASSACHUSETTS

DRAWING DIRECTORY

"THIS DRAWING AND SPECIFICATIONS, HEREIN, ARE THE PROPERTY OF DIGITAL EQUIPMENT CORPORATION AND SHALL NOT BE REPRODUCED OR COPIED OR USED IN WHOLE OR IN PART AS THE BASIS FOR THE MANUFACTURE OR SALE OF ITEMS WITHOUT WRITTEN PERMISSION. COPYRIGHT © 1974 , DIGITAL EQUIPMENT CORPORATION"

CUSTOMER PRINT SET INDEX

THIS IS PRINT SET

SEQUENCE		SEQUENCE	
DRAWING DIRECTORY BA11-K	B-DD-BA11-K	MFG. PRINT SET	
UNIT ASSY BA11-K	E-UA-BA11-K-Ø	IN PLANT PACK. INST.	A-SP-3700167-0-0
UNIT ASSY BA11-K P.L.	A-PL-BA11-K-Ø	SKID LOAD PACK. INST.	A-SP-3700165-0-0
DRAWING DIRECTORY H765	B-DD-H765-Ø	CUST. CUSHIONED PACK. INST.	A-SP-3700169-0-0
UNIT ASSY BC11A	D-UA-BC11A-1Ø-Ø		
BC11A UNIBUS CABLE, M919	B-CS-M919-0-1		
BC11A UNIBUS CABLE, M929	B-CS-M929-0-1		

UNIT VARIATIONS

VAR	TITLE	PRINT SET 1
BA11-KE	120 VAC 50/60 HZ	X
BA11-KF	240 VAC 50/60 HZ	X
BA11-KH	120 VAC 50/60 HZ (MANUF. ONLY)	X
BA11-KJ	240 VAC 50/60 HZ (MANUF. ONLY)	X
BA11-KK	120 VAC 50/60 HZ (NO H754) (MANUF ONLY)	X
BA11-KL	240 VAC 50/60 HZ (NO H754) (MANUF ONLY)	X
BA11-KA	NO POWER SUPPLY (MANUF ONLY)	X
BA11-KS	120VAC 50/60 HZ	
BA11-KT	240VAC 50/60 HZ	
BA11-KW	120VAC 50/60 HZ	
BA11-KX	240VAC 50/60 HZ	

REVISIONS

DATE	CHG. NO.	REV
E.A.	BA11-K-4	A
E.A.	BA11K-5	B
WRH	BA11K-7	C
B.M.	BA11K-8	D
LJ	BA11K-9	E
RTB	BA11K-10	F
R.P.	BA11K-11	H
R.J.P.	BA11K-12	J
P.J.P.	BA11K-13	K
3-77	BA11K-14	L
11-77	BA11K-15	M
11-78	BA11K-ML17	N
[illegible]	BA11K-18	P
[illegible]	BA11K-TW20	R

USED ON OPTION/MODEL

11/05-S	
11/35-S	

SHEET 1 OF 4

DRN. J. FERGUSEN	DATE 5/22/74	TITLE DRAWING DIRECTORY BA11-K
CHK'D. D. HEALY	DATE 7/3/74	
PROJ ENG. E. Anton	DATE 9/4/74	
PROD. R.K. Peterson	DATE 10/1/74	SIZE B · CODE DD · NUMBER BA11-K · REV R
FIELD SERV. R.L. Gates	DATE 9/13/74	DIST

DEC 16-(325)-1062-1A-R072

DRB 106

TW

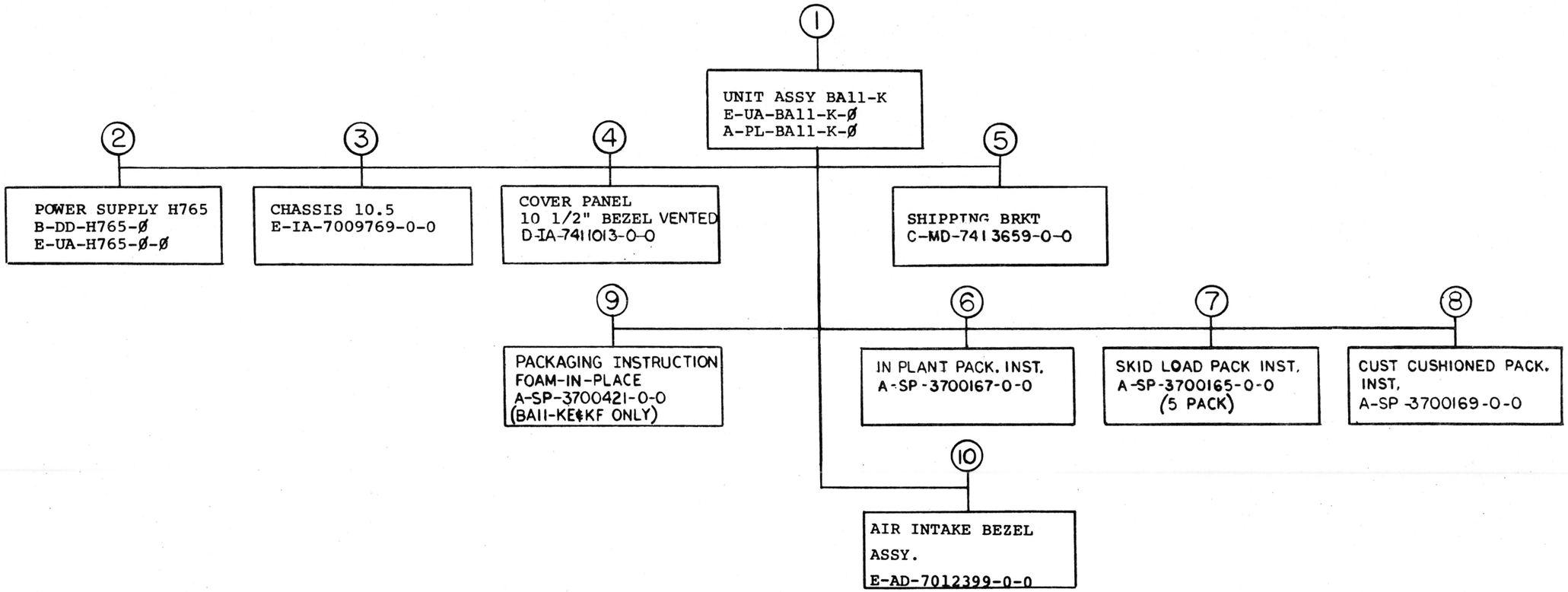

TITLE		SIZE	CODE	NUMBER	REV
DRAWING DIRECTORY BA11-K	SHEET 2 OF 4	B	DD	BA11-K	R

CUSTOMER PRINT SET				MFG. SET	ELECTRICAL							CUSTOMER PRINT SET				MFG SET	ELECTRICAL					
1					FIND NO.	DRAWING NO.	REV	NO OF SHT	DESCRIPTION	OPTION NO./FILE DATE		1					FIND NO.	DRAWING NO.	REV	NO OF SHT	DESCRIPTION	OPTION NO./FILE DATE
X					1	E-UA-BA11-K-Ø	M	2	UNIT ASSY BA11-K													
X						A-PL-BA11-K-Ø	M	2	UNIT ASSY BA11-K PL													
						A-SP-BA11-K-6		8	BA11-K BASIC CHECKOUT AND ACCEPTANCE PROCEDURE													
						A-SP-BA11-K-7		10	BA11-K BASIC ASSEMBLY PROCEDURE													
C					2	B-DD-H765-Ø	XX	5	POWER SUPPLY H765													

CUSTOMER PRINT SET CODES	
	X = PRINT OF DOCUMENT INCLUDED IN PRINT SET
	C = INCLUDES ALL PRINTS INDICATED ON DOCUMENT
	S = CONFIDENTIAL AUTHORIZED SIGNATURE REQUIRED

TITLE		SIZE	CODE	NUMBER	REV
DRAWING DIRECTORY BA11-K	SHEET 3 OF 4	B	DD	BA11-K	R

DRB 108

DEC 16-(325)-1062-2B-R972

TW

FIND NO.	DRAWING NO.	DESCRIPTION	TYPE
1	E-UA-BA11-K-Ø	UNIT ASSY BA11-K	E/M
	A-PL-BA11-K-Ø	UNIT ASSY BA11-K PL	E/M
	D-IA-7009768-0-0	COVER, CHASSIS	M
	D-PS-1211825-0-0	SLIDE, 3 POS TILT	M
	D-MD-7412184	CABLE, TROUGH CHASSIS	E/M
	D-UA-BC11A-1Ø-Ø	UNIBUS, CABLE, 10 FT	E/M
	B-CS-M919-Ø-1	BUS CONNECTOR M919	E
	B-CS-M929-Ø-1	BUS CONNECTOR M929	E
	D-PS-1212405-ØØ	CARD GUIDE	M
	A-DC-5309414-Ø	DECAL UL	M
	A-PS-3613281-Ø-Ø	DECAL	M
	A-DC-5309413-Ø	DECAL NFPA	M
2	B-DD-H765-Ø	DWG DIRECTORY H765	E/M
	E-UA-H765-Ø-Ø	POWER SUPPLY H765	M
3	E-IA-7009769-Ø-Ø	CHASSIS, 10.5	M
	E-IA-7411703-Ø-Ø	CHASSIS, FRONT	M
	E-IA-7411707-Ø-Ø	CHASSIS, SIDE	M
	D-MD-7411706-Ø-Ø	BRACKET, HAT	M
	D-MD-7411705-Ø-Ø	BRACKET, CARD GUIDE	M
	C-MD-7412185-Ø-Ø	PLATE CABLE	M
4	D-IA-7411013-Ø-Ø	COVER PANEL 10 1/2 BEZEL	M
5	C-MD-7413659-Ø-Ø	SHIPPING BRKT	M

FIND NO.	DRAWING NO.	DESCRIPTION	TYPE
6	A-SP-3700167-0-0	IN PLANT PACK. INST.	M
7	A-SP-3700165-0-0	SKID LOAD PACK. INST. (5 PACK)	M
8	A-SP-3700169-0-0	CUST. CUSHIONED PACK. INST.	M
9	A-SP-3700421-0-0	PACKAGING INSTRUCIONS (FOAM-IN-PLACE) (BA11-KE & KF VARIATIONS ONLY)	M
10	E-AD-7012399-0-0	AIR INTAKE BEZEL ASSY	
	E-MD-7414506-0-0	BEZEL, RX01 (ONE CAST)	
	D-MD-7415744-0-0	BRKT, BEZEL MTG	
	D-IA-7415743-0-0	PANEL, AIR INTAKE	

TYPE: E ELECTRICAL
M MECHANICAL
E/M ELECTRO/MECHANICAL

digital

TITLE	SHEET	SIZE	CODE	NUMBER	REV
DRAWING DIRECTORY BA11-K	4 OF 4	B	DD	BA11-K	R

DRB 108A

THIS DRAWING AND SPECIFICATIONS, HEREIN, ARE THE PROPERTY OF DIGITAL EQUIPMENT CORPORATION AND SHALL NOT BE REPRODUCED OR COPIED OR USED IN WHOLE OR IN PART AS THE BASIS FOR THE MANUFACTURE OR SALE OF ITEMS WITHOUT WRITTEN PERMISSION.
COPYRIGHT © 1974, DIGITAL EQUIPMENT CORPORATION

* FOR MFG USE ONLY

LEGEND	
NUMBER	VARIATION
BA11-KE	120V 50/60 HZ
BA11-KF	240V 50/60 HZ
BA11-KH *	120V 50/60 HZ
BA11-KJ *	240V 50/60 HZ
BA11-KK *	120V 50/60 HZ
BA11-KL *	240V 50/60 HZ
BA11-KA *	NO POWER SUPPLY
BA11-KS *	220VAC 50/60 HZ
BA11-KT *	240VAC 50/60 HZ
BA11-KW	120 50/60
BA11-KX	240 50/60

NOTES:
1. CAUTION: OFF SHEEET PARTS LISTS EXISTS SEE A-PL-BA11-K-Ø
2. ~~GROUND LUG OF PWR. DIST. P.C. ON ST. ATTACHES TO CHASSIS BY STANDOFF~~
3. ~~MOUNTING RAIL SYSTEM UNIT MOUNTING SCREWS TO 15 IN. LBS WITH A TORQUE SCREW DRIVER~~
4. ATTACH SHIPPING BRACKETS TO POWER SUPPLY AND BOLT THROUGH HOLE IN CABINET RAILS.
5. INSTALL CARD GUIDES, ITEM NOS. 5 & 36 USING TOOL NO. 9412610-2.
6. ASSEMBLE ITEM NO. 37 USING EXISTING HARDWARE.
7. REMOVE FOAM STRIPS FROM ITEM* 1 AND POSITION ITEM* 39 ONTO ITEM* 1 PER VIEW E-E.
8. SYMMETRICALLY LOCATE ITEM* 40 ONTO ITEM* 1.
9. ITEM 43 NOT SHOWN. USE ONLY FOR SHIPPING TO HOLD POWER CORD IN PLACE.
10. ITEM 38 INSTALLED AT FA+T
11. GND THE GRN. W/YELLOW TRACE CHASSIS GND TERMINAL WITH TWO WIRE ON THE STANDOFF. GND THE OTHER TERMINAL TO THE STUD ON THE AC INPUT ASSY. GND THE AC INPUT ASSY TO THE STUD ON THE H765 P.S.
12. INSTALLED AT FA+T. EXCEPT LOOSE PIECE FOR DOCK MERGE.
13. FOR INSTALLATION OF ITEM #2 SEE DWG E-AD-7012399-0-0.
14. ATTACH PER NOTE 11 USING ITEM NO. 14.

DETAIL A
SEE SHEET 3

DETAIL B
SEE SHEET 3

.25 x .25 ORIENTATION HOLE REF

35 (1 REQ'D FOR ALL VARIATIONS) LOCATE AS SHOWN USING ¼" HOLE AS A STARTING PLACE. DECAL MAY BE PLACED CLOSER TO CARD GUIDES FOR EASE OF APPLICATION, 2 PLACES.

36 (QTY 24) NOTE 5 LOCATE MAGENTA CARD GUIDES IN EVEN NUMBERED SLOTS, BOTH SIDES.

5 (QTY 24) LOCATE WHITE CARD GUIDES IN ODD NUMBERED SLOTS, BOTH SIDES.

1 REF

NO CARD GUIDES IN FIRST AND LAST HOLES

VIEW A-A
SCALE: NONE

36 REF
5 REF
36 REF
5 REF
35 (REQ'D FOR KE & KF VARIATIONS ONLY)

VIEW E-E
SCALE: NONE

E
SEE SHEET 2

4
42
41 (SEE NOTE 11)
32
46
14
B
REF
(H754)
(H785)
(H744)
DANGER HIGH VOLTAGE
A
E
35 REF
E
5 REF
18
A
REG 2 (H744)
REG 1 (H745)
46
14
SEE NOTE 14
10 QTY 4
31
38
32
REF
25.00 REF.
E

TOP VIEW
(CHASSIS COVER REMOVED)

38 REF.
37
SEE NOTE 6
AC POWER CORD
38 REF.

VIEW B-B

10 (QTY 4)
1
2
43 QTY 8
28
C
C
13 (QTY 6)
D
34 (230V)
33 (115V)
17 (230V)
9 (115V)
46
14 REF
32 REF
REF
15
21 QTY 4
8
OR
52
SEE NOTE 13
14 REF
6
2
4 REF
10 (REF)
51 (QTY 6)
7 (QTY 4)
D
3 REF
26.53 REF.

RIGHT SIDE VIEW

VIEW C-C
SCALE: NONE
ONLY TOP COVER ITEM* 2 SHOWN

14 (SEE NOTE 14)
19.00 REF.
10.44 REF.
SEE NOTE 11
CONNECT LUG TO G1 (REF)
F13
F14
J8
J2
F15
F16
J12
J11
J10
J9
J7
J1
J6
J5
J4
J3
2 REF
G1 (REF)
3 REF

VIEW D-D
REAR VIEW
(POWER SUPPLY AND CHASSIS SLIDES REMOVED)

FIRST USED ON OPTION/MODEL	QTY.	DESCRIPTION	PART NO.	ITEM NO.
BA11-K		PARTS LIST		

DIMENSIONAL TOLERANCE
DIMENSIONS ARE IN INCHES
UNLESS OTHERWISE SPECIFIED

MILLIMETERS	INCHES	ANGLES
XXX ± 0.10	XXX ± .005	±0° 30'
XX ± 0.5	XX ± .01	
X ± 1	X ± .1	

THIRD ANGLE PROJECTION
REMOVE BURRS AND BREAK SHARP CORNERS SURFACE QUALITY ✓
MATERIAL
FINISH
NEXT HIGHER ASSY.
B-DD-BA11-K

ORIG. Carl McCoy 2-14-75
CHK'D C.J. Hamby 2-14-75
ENGR Ken Schneider 2-24-75
PROJ. Mark Lemone 2-24-75
DRAFT DATE

digital

TITLE: UNIT ASS'Y BA11-K

CODE EUA | NUMBER BA11-K-Ø | REV. U

SIZE D | SCALE NONE | SHEET 1 OF 2

B. FRAMM	U	BA11-TW21	27 JAN 76	
J. SERBIA	T	BA11-TW28A	4 MAR 76	
BOB HALL	S	BA11-TW19	27 FEB 76	
SANDY HOYLE	R	BA11-TW18	1-4-76	
E. ROMANOWSKI	P	BA11-TW07	30 NOV 75	
B. CRANN	N	BA11-G0015	21 NOV 75	
B. PORRECA	M	BA11-K-0005	21 MAY 75	
B. LOUSSO	L	BA11-G0004	21 MAY 75	
B. CHRISTIANSEN	K	BA11-K-0003	21 MAY 75	
B. PORRECA	J	BA11-K-0002	21 MAY 75	
B. PORRECA	H	BA11-K-0001	21 MAY 75	
P. BARRY	G	BA11-G0010	5-9-75	
E. MINOR	F	BA11-G0009	6-20-75	
E. MINOR	E	BA11-G0008	6-20-75	
B. HALL	D	BA11-G0007	2-24-75	
E. ANTON	C	BA11-G0006	2-24-75	
E. ANTON	B	BA11-G0005	2-24-75	
	A			
DRAWING	REV.	COMMENTS		

"THIS DRAWING AND SPECIFICATIONS, HEREIN, ARE THE PROPERTY OF DIGITAL EQUIPMENT CORPORATION AND SHALL NOT BE REPRODUCED OR COPIED OR USED IN WHOLE OR IN PART AS THE BASIS FOR THE MANUFACTURE OR SALE OF ITEMS WITHOUT WRITTEN PERMISSION.
COPYRIGHT © 1972 DIGITAL EQUIPMENT CORPORATION"

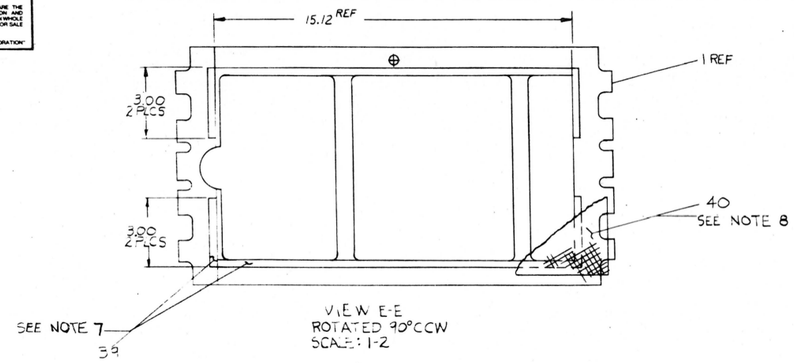

VIEW E-E
ROTATED 90°CCW
SCALE: 1-2

31

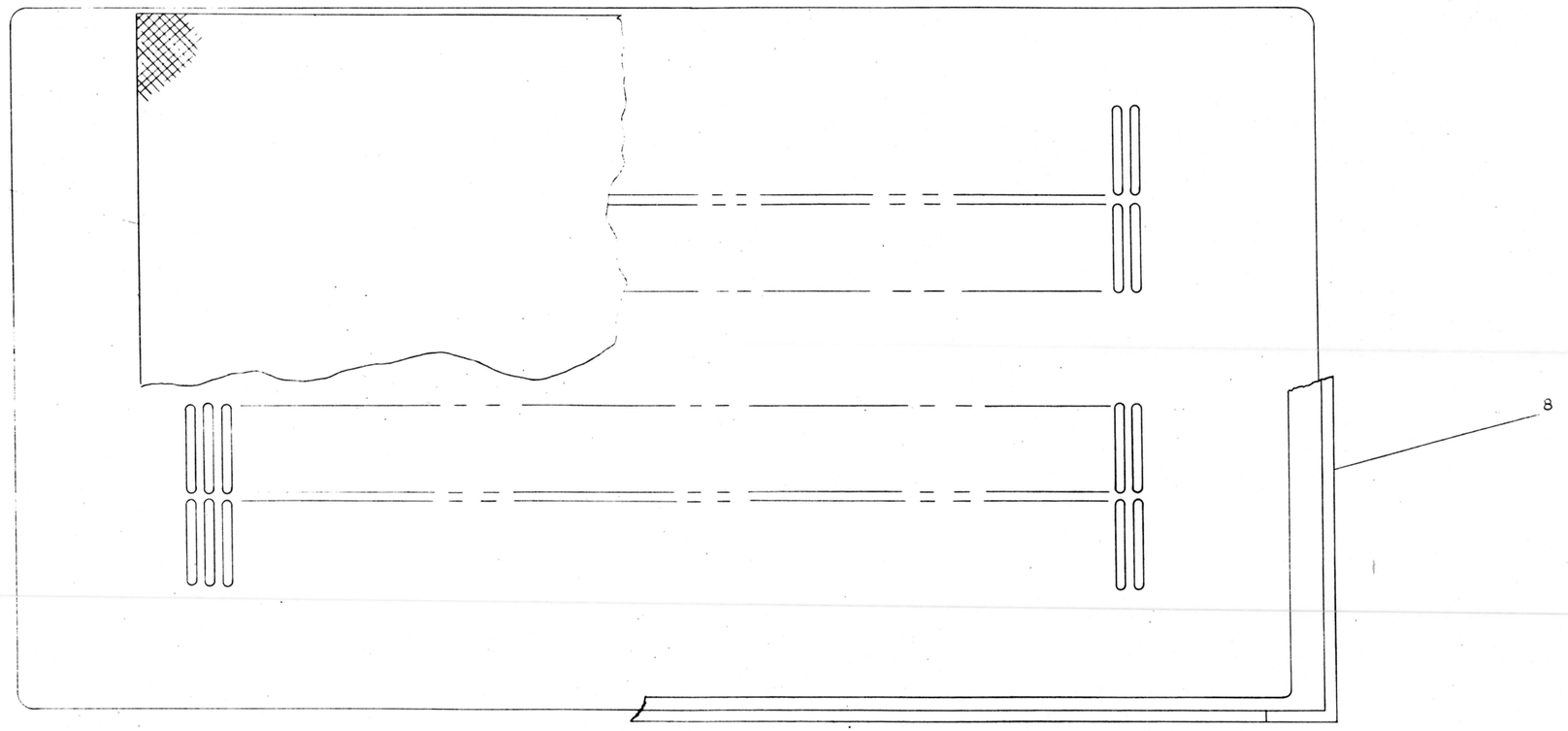

REAR VIEW

REVISION HISTORY		
DATE	ECO NUMBER	REV

TITLE	UNIT ASSY BA11-K	
SIZE	CODE	DOCUMENT NUMBER
E	UA	BA11-K-0
REV	U	
SCALE	SHEET 2 OF 3	

1 7W

"THIS DRAWING AND SPECIFICATIONS, HEREIN, ARE THE PROPERTY OF DIGITAL EQUIPMENT CORPORATION AND SHALL NOT BE REPRODUCED OR COPIED OR USED IN WHOLE OR IN PART AS THE BASIS FOR THE MANUFACTURE OR SALE OF ITEMS WITHOUT WRITTEN PERMISSION.
COPYRIGHT ©198(DIGITAL EQUIPMENT CORPORATION"

DETAIL A
SCALE:NONE

CHASSIS TRACK SLIDE

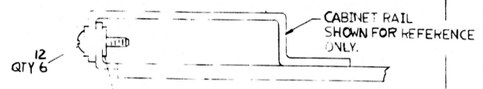

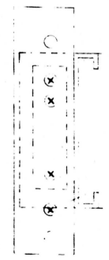

FRONT VIEW

ACCURIDE SLIDE

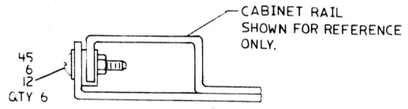

TOP VIEW

DETAIL B
SCALE:NONE

CHASSIS TRACK SLIDE

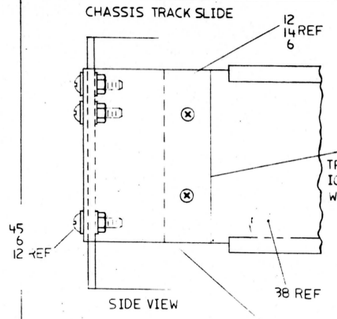

SIDE VIEW

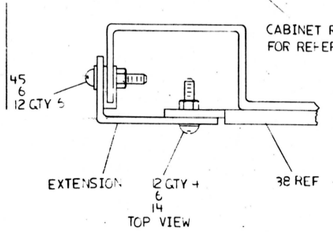

TOP VIEW

ACCURIDE SLIDE

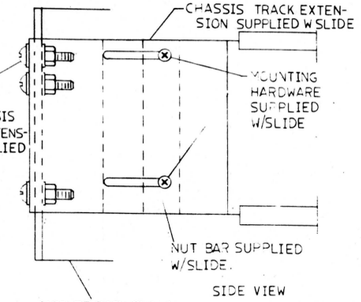

SIDE VIEW

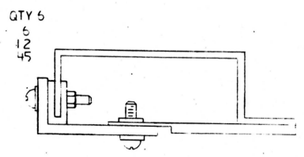

NOTES:

REVISION HISTORY		
DATE	ECO NUMBER	REV.

TITLE	DOCUMENT NUMBER	
UNIT ASS'Y BAII-K	SIZE E / CODE JA / BAII-K-0	REV U
	SCALE NONE	SHEET 3 OF 3

DRE 109A

DIGITAL EQUIPMENT CORPORATION
MAYNARD, MASSACHUSETTS
PARTS LIST

MADE BY BILL BLODGET	CHECKED D. HEALY	SECTION 1
DATE 6/26/74	DATE 6/27/74	
ENG P. E. Jansen	PROD Lucas	ISSUED SECT. 1
DATE 8-23-74	DATE 8/23/74	

ITEM NO.	DWG NO. / PART NO.	DESCRIPTION	QUANTITY / VARIATION										
			BA11-KE	BA11-KF	BA11-KH	BA11-KJ	BA11-KK	BA11-KL	BA11-KA	BA11-KS	BA11-KT	BA11-KW	BA11-KX
1	E-IA-7009769-0-0	CHASSIS 10.5	1	1	1	1	1	1	1	1	1	1	1
2	D-IA-7009768-0-0	COVER, CHASSIS	2	2	–	–	–	1	–	2	2	2	2
3	D-CS-5410864-0-1	POWER DISTRIBUTION BOARD	REF	REF	REF	REF	REF	REF	REF	–	REF	REF	REF	REF
~~4~~	~~D-PS-1211825-0-0~~	~~SLIDE, 3 POS TILT~~	~~1pr~~	~~1pr~~	~~–~~	~~–~~	~~–~~	~~–~~	~~–~~	~~–~~	~~–~~	~~1PR~~	~~1PR~~
5	D-PS-1212405-0	CARD GUIDE, SINGLE	24	24	24	24	24	24	24	24	24	24	24
6	9006071-3	SCREW, PHL TRUSS HD #10-32 X .38 *	16	16	–	–	–	–	–	16	16	10	10
7	9006020-2	SCREW, PHL FLAT HD #6-32 X .25	4	4	4	4	4	4	–	4	4	4	4
8	D-IA-7411013-0-0	COVER, PANEL 10 1/2 BEZEL (SNAP-ON VENTED)	1	1	–	–	–	–	–	–	–	1	1
9	B-DD-H765-A	POWER SUPPLY H765-A 120V 50/60 HZ	1	–	1	–	–	–	–	1	–	1	–
10	9006020-3	SCREW, PHL. TRUSS HD #6-32 X .25	4	4	8	8	8	8	4	4	4	9	0
~~11~~	~~9006035~~	~~WASHER INTERNAL TOOTH LOCK #6~~	~~4~~	~~4~~	~~4~~	~~4~~	~~–~~	~~–~~	~~–~~	~~–~~	~~–~~	~~4~~	~~4~~
12	9007651	WASHER EXTERNAL TOOTH #10 *	12	12	–	–	–	–	–	12	12	12	12
13	9009599	SCREW, PHL FLAT HD (SPECIAL)	6	6	6	6	6	6	–	6	6	6	6
14	9006565	NUT, KEPS, #10-32	8	8	–	–	–	–	–	8	8	8	8
15	DEC-3-(374)-1825-N1174	STICKER, "CONFIGURATION"	1	1	–	–	–	–	–	1	1	1	1
~~16~~	~~D-IA-7010059-0-0~~	~~SHIPPING BRKT, ASSY~~	~~1~~	~~1~~	~~–~~	~~–~~	~~–~~	~~–~~	~~–~~	~~–~~	~~–~~	~~1~~	~~1~~
17	B-PP-H765-B	POWER SUPPLY H765-B, 240V 50/60 HZ	–	1	–	1	–	–	–	–	1	–	1
18	D-MD-7412184-0-0	CABLE TROUGH CHASSIS	–	–	1	1	1	1	–	–	–	–	–
~~19~~	~~9006108-1~~	~~SCR, PH. HD SELF TAP #6-32 X .25~~	~~1~~	~~1~~	~~5~~	~~5~~	~~–~~	~~–~~	~~–~~	~~–~~	~~–~~	~~1~~	~~1~~
~~20~~	~~D-CS-BC11K-10-F~~	~~UNIBUS CABLE, 10 FT~~	~~1~~	~~1~~	~~–~~	~~–~~	~~–~~	~~–~~	~~–~~	~~1~~	~~1~~	~~1~~	~~1~~
21	1209224	LATCH MOLDING	4	4	–	–	–	–	–	–	–	–	–
22	~~9006007-2~~	~~SCR PH HD FLT #10-32 X .25~~	~~8~~	~~8~~	~~–~~	~~–~~	~~–~~	~~–~~	~~–~~	~~–~~	~~–~~	~~–~~	~~–~~

TITLE	ASSY NO.	SIZE	CODE	NUMBER	REV.	ECO NO.
UNIT ASSY BA11-K	E-UA-BA11-K-Ø	A	PL	BA11-K-Ø	U	BA11-K TW021
	SHEET 1 OF 3	DIST.				

DEC FORM DEC 16-(325)-1031-N870
DRA 110

TW

DIGITAL EQUIPMENT CORPORATION
MAYNARD, MASSACHUSETTS
PARTS LIST

MADE BY BILL BLODGET	CHECKED D. HEALY	SECTION 1
DATE 6/26/74	DATE 6/27/74	
ENG P. E. JANSON	PROD W. LUCAS	ISSUED SECT. 1
DATE 8-23-74	DATE 8-23-74	

ITEM NO.	DWG NO. / PART NO.	DESCRIPTION	QUANTITY / VARIATION										
			BA11-KE	BA11-KF	BA11-KH	BA11-KJ	BA11-KK	BA11-KL	BA11-KA	BA11-KS	BA11-KT	BA11-KW	BA11-KX
23	A-SP-3700167-0-0	IN PLANT PACK. INST.	–	–	–	REF	REF	REF	REF	REF	REF	REF	REF
24	A-SP-3700165-0-0	SKID LOAD PACK INST. (5 PACK)	–	–	REF	REF	REF	REF	REF	REF	REF	REF	REF
25	A-SP-3700169-0-0	CUST. CUSHIONED PACK. INST. (SINGLE)	–	–	REF	REF	REF	REF	REF	REF	REF	REF	REF
26	A-SP-BA11-K-6	BA11-K BASIC CHECKOUT AND ACCEPTANCE PROCEDURE	REF	REF	REF	REF	REF	REF	REF	REF	REF	REF	REF
27	A-SP-BA11-K-7	BA11-K BASIC ASSEMBLY PROCEDURE	REF	REF	REF	REF	REF	REF	REF	REF	REF	REF	REF
28	A-DC-5309414-0	DECAL, UL	1	1	–	–	–	–	–	1	1	1	1
~~29~~	~~A-DC-5309413-0~~	~~DECAL, NFPA~~	~~1~~	~~1~~	~~–~~	~~–~~	~~–~~	~~–~~	~~–~~	~~1~~	~~1~~	~~1~~	~~1~~
31	1211255-0-0	PRE FILTER	1	1	–	–	–	–	–	–	–	1	1
32	C-MD-7413658-0-0	SHIPPING BRACKET (INSTALLED AT FA+T)	2	2	–	–	–	–	–	2	2	2	2
33	B-DD-H765-C	POWER SUPPLY H765-C 120VAC 50/60HZ NO H754	–	–	–	–	1	–	–	–	–	–	–
34	B-DD-H765-D	POWER SUPPLY H765-D240VAC 50/60HZ NO H754	–	–	–	–	–	1	–	–	–	–	–
35	A-PS-3613281-00	DECAL, ADHESIVE BACKED, BA11-K	2	2	1	1	1	1	1	2	2	2	2
36	D-PS-1212405-1	CARD GUIDE, SINGLE	24	24	24	24	24	24	24	24	24	24	24
37	9007086-00	CLAMP, CABLE	1	1	1	1	1	1	–	1	1	1	1
38	D-PS-1211825-Ø1	SLIDE, 3 POS. TILT **	1PR	1PR	–	–	–	–	–	1 pr	1pr	–	–
39	A-PS-1212431-ØØ	TAPE, HOOK, MOLDED	–	–	–	–	–	–	–	A/R	A/R	–	–
40	A-PS-1212392-Ø1	FILTER, FOAM	–	–	–	–	–	–	–	1	1	–	–
41	9006635	WASHER, INTERNAL TOOTH LOCK #10	1	1	1	1	1	1	1	1	1	1	1
42	9006231-09	SCREW, HEX HEAD #10-32 X .5	1	1	1	1	1	1	1	1	1	1	1
43	9007032	TIE, CABLE CLAMP SST2-M	2	2	2	2	2	2	2	2	2	2	2

TITLE	ASSY NO.	SIZE	CODE	NUMBER	REV.	ECO NO.
UNIT ASSY BA11-K	E-UA-BA11-K-Ø	A	PL	BA11-K-Ø	U	
	SHEET 2 OF 3	DIST.				

DEC FORM [illegible]-(325)-1031-N870
DRA 110

TW

DIGITAL EQUIPMENT CORPORATION
MAYNARD, MASSACHUSETTS
PARTS LIST

MADE BY / DATE	CHECKED / DATE	SECTION 1
ENG / DATE	PROD / DATE	ISSUED SECT. 1

ITEM NO.	DWG NO./PART NO.	DESCRIPTION	QUANTITY VARIATION BA11-KE	BA11-KF	BA11-KH	BA11-KJ	BA11-KK	BA11-KL	BA11-KA	BA11-KS	BA11-KT	BA11-KW	BA11-KX
~~44~~	~~90-06636~~	~~Washer, internal tooth #10*~~	~~18~~	~~18~~	~~-~~	~~-~~	~~-~~	~~-~~	~~-~~	~~18~~	~~18~~	~~18~~	~~18~~
45	90-07786-00	Nut, Tinnerman	12	12	-	-	-	-	-	12	12	12	12
46	90-06664-00	Washer, flat #10*	14	14	-	-	-	-	-	14	14	14	14
47	90-06073-03	Screw, Phil Truss hd #10-32.5*	8	8	-	-	-	-	-	8	8	8	8
48	A-SP-3700421-0-0	Packaging Instructions (foam in place)	Ref	Ref	-	-	-	-	-	-	-	-	-
49	90-06070-02	Ph. Flat hd screw, #10-32 X 5/16	8	8	-	-	-	-	-	-	-	-	-
50	A-PS-3613209-00	Serial Number Label	A/R	A/R	A/R	A/R	A/R	A/R	A/R	A/R	A/R	A/R	A/R
51	9009700	Sems screw, #10-32X.5	6	6	-	-	-	-	-	6	6	6	6
52	E-AD-7012399-0-0	Air Intake Bezel Assy	-	-	-	-	-	-	-	-	-	1	1
53	9006039-01 ***	SCREW, PAN PHILLIPS 8-32 X.5	2	2	-	-	-	-	-	2	2	2	2

* Item 51 is an allowable substitute for the combination of these parts when used on item 38

** 1211825-02 IS AN ALLOWABLE SUBSTITUTE

*** REQUIRED ONLY IF 1211825-02 IS USED

TITLE	ASSY NO.	SIZE	CODE	NUMBER	REV	ECO NO.
Unit Assy BA11-K	E-UA-BA11-K-Ø	A	PL	BA11-K-0	U	
	SHEET 3 OF 3	DIST				

DEC FORM DRA 110

digital EQUIPMENT CORPORATION MAYNARD MASSACHUSETTS

DRAWING DIRECTORY

"THIS DRAWING AND SPECIFICATIONS, HEREIN, ARE THE PROPERTY OF DIGITAL EQUIPMENT CORPORATION AND SHALL NOT BE REPRODUCED OR COPIED OR USED IN WHOLE OR IN PART AS THE BASIS FOR THE MANUFACTURE OR SALE OF ITEMS WITHOUT WRITTEN PERMISSION. COPYRIGHT © 1974 , DIGITAL EQUIPMENT CORPORATION"

CUSTOMER PRINT SET INDEX

THIS IS PRINT SET

SEQUENCE		SEQUENCE	
DRAWING DIRECTORY H765	B-DD-H765-Ø	MFG. PRINT SET	
UNIT ASSY H765	E-UA-H765-Ø-Ø	PACKAGING INSTRUCTIONS	A-SP-3700174-0-0
AC INPUT BOX ASSY	D-AD-7014420-Ø-Ø		
AC PWR CONTROL BOARD	D-UA-5413089-Ø-1		
DRAWING DIRECTORY H744	B-DD-H744-Ø		
DRAWING DIRECTORY H745	B-DD-H745-Ø		
DRAWING DIRECTORY H754	B-DD-H754-Ø		
PWR DISTRIBUTION BOARD	D-CS-5410864-0-1		
AC POWER CORD	D-AD-7012500-0-0		
PWR LINE MONITOR/15V REG	D-CS-5411086-0-1		
TRANSFORMER ASSEMBLY	E-AD-7011486-0-0		

UNIT VARIATIONS

VAR	TITLE	PRINT SET 1
H765-A	120V 50/60 HZ	X
H765-B	240V 50/60 HZ	X
H765-C	120V 50/60 HZ NO H754 NO B.B.	X
H765-D	240V 50/60 HZ NO H754 NO B.B.	X
H765-P	120V 50/60 HZ NO REG	X
H765-R	240V 50/60 HZ NO REG.	X

REVISIONS		
DATE	CHG. NO.	REV
CN	H765-3	A
CN	H765 4	B
SL	H765-6	C
SL	H765-7	D
RK	H765-8	E
RNB	H765-9	F
R.P.	H765-10	H
R.P.	H765-11	J
KT	H765-12	K
KT	H765-13	L
R.P.	H765-14	M
KT	H765-15	N
8-77	H765-16	P
9-77	H765-17	R

USED ON OPTION/MODEL	
BA11-K	
11/35-S	

SHEET 1 OF 5

DRN. J. FERGUSON	DATE 6/25/74	TITLE: DRAWING DIRECTORY POWER SUPPLY H765
CHK'D. D. HEALY	DATE 7/3/74	
PROJ ENG. E. Anton	DATE 8/4/74	
PROD. R.K. Peterson	DATE 10/1/74	SIZE B / CODE DD / NUMBER H765-Ø / REV F
FIELD SERV. R. L. Gates	DATE 9/13/74	DIST

DEC 16-12231-1062-1A-8972

DRB 106

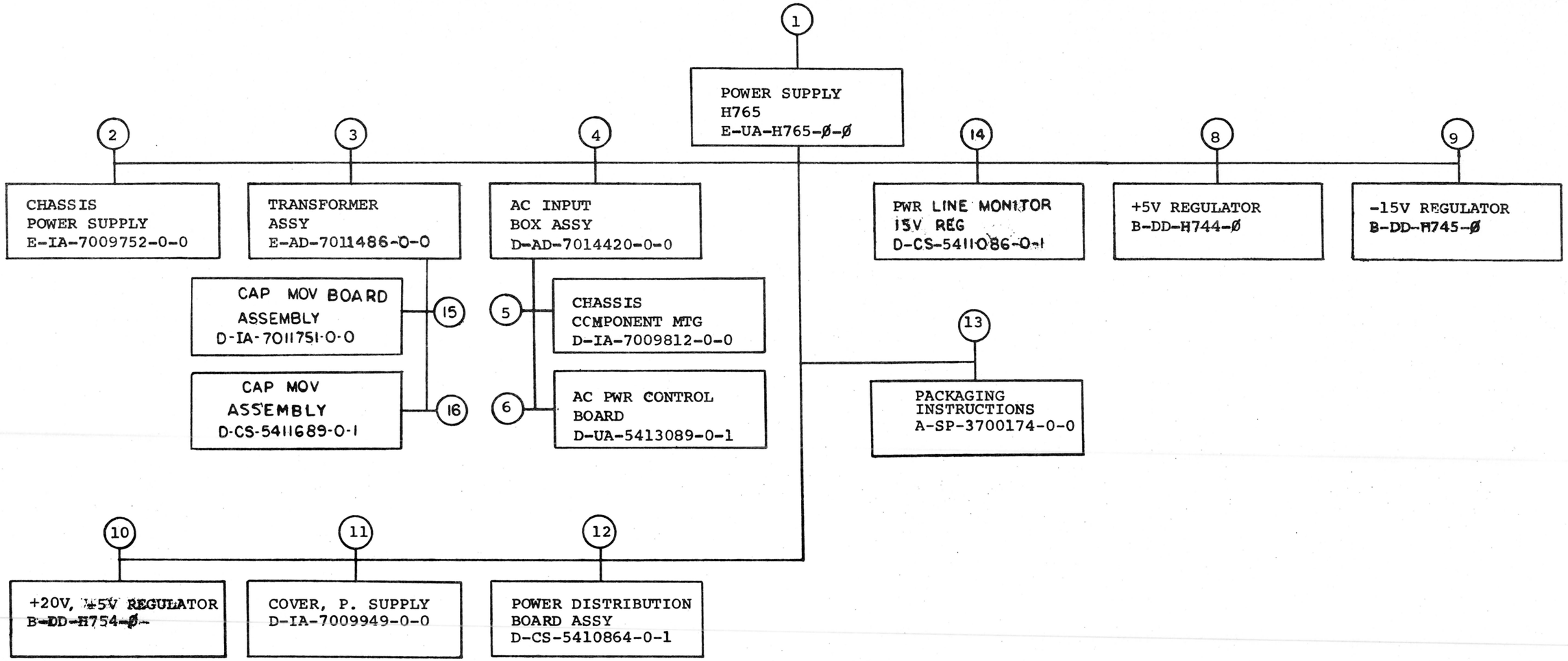

TITLE			SIZE	CODE	NUMBER	REV
DRAWING DIRECTORY POWER SUPPLY H765	SHEET 2 OF 5		B	DD	H765-Ø	R

CUSTOMER PRINT SET						ELECTRICAL						
1				MFG.	SET FIND NO.	DRAWING NO.	REV	NO OF SHT	DESCRIPTION	OPTION NO./FILE DATE
X					1	E-UA-H765-Ø-Ø	T	2	POWER SUPPLY H765	
						A-SP-H765-0-9			H765 POWER SUPPLY ASSEMBLY PROCEDURE	
X					3	E-AD-7011486-0-0	#		TRANSFORMER ASSY	
						A-SP-7010014-0-8	A		TEST PROCEDURE	
						A-CS-7010014-TA-1	A		TESTER C.S.	
						A-UA-7010014-TA-0			TESTER U.A.	
						A-PL-7010014-TA-0	A		TESTER P.L.	
						A-SP-7011486-0-9			TRANSFORMER ASSY PROCEDURE	
X					4	D-AD-7014420-0-0	#	2	AC INPUT BOX ASSY	
						A-SP-7009811-0-8			TEST PROCEDURE	
						A-CS-7009811-TA-1			TESTER C.S.	
						A-UA-7009811-TA-0			TESTER U. A.	
						A-PL-7009811-TA-0			TESTER P.L.	
						A-SP-7009811-0-9			AC INPUT BOX ASSY PROCEDURE	
X					6	D-UA-5413089-0-0			PILOT CONTROL BOARD	
C					8	B-DD-H744-0	#	2	DRAWING DIRECTORY H744	
C					9	B-DD-H745-0	#	2	DRAWING DIRECTORY H745	
C					10	B-DD-H754-0	#	3	DRAWING DIRECTORY H754	

CUSTOMER PRINT SET						ELECTRICAL						
1				MFG	SET FIND NO.	DRAWING NO.	REV	NO OF SHT	DESCRIPTION	OPTION NO./FILE DATE
X					12	D-CS-5410864-0-1	#	3	POWER DIST. BD. ASSY	
						D-IA-5010863-0-0	#	1	ETCHED CIRCUIT BOARD	
						A-SP-5410864-0-8			TEST PROCEDURE	
						A-SP-5410864-0-9			ASSEMBLY PROCEDURE	
X					14	D-CS-5411086-0-1	#	4	PWR LINE MONITOR/15V REG	
						A-SP-11/45-TA-2			TEST PROCEDURE	
						A-SP-5411086-0-3			ENGINEERING SPECIFICATION	
						D-IA-7010138-0-0			HARNESS INTERCONNECTION	
					15	D-IA-7011751-0-0			CAP MOV BOARD ASSY	
					16	D-CS-5411689-0-1			CAP MOV ASSY	

CUSTOMER PRINT SET CODES	
	X = PRINT OF DOCUMENT INCLUDED IN PRINT SET
	C = INCLUDES ALL PRINTS INDICATED ON DOCUMENT
	S = CONFIDENTIAL AUTHORIZED SIGNATURE REQUIRED

TITLE	SHEET	SIZE	CODE	NUMBER	REV
DRAWING DIRECTORY POWER SUPPLY H765	SHEET 3 OF 5	B	DD	H765-Ø	R

CUSTOMER PRINT SET 1	MFG. SET	FIND NO.	DRAWING NO.	REV	NO OF SHT	DESCRIPTION	OPTION NO./FILE DATE
			MECHANICAL				
		1	E-UA-H765-Ø-Ø	R	2	POWER SUPPLY H765	
			D-IA-7009950-0-0		1	THROUGH WIRE	
		2	E-IA-7009752-0-0		1	CHASSIS, POWER SUPPLY	
			E-IA-7411682-0-0		1	CHASSIS, POWER SUPPLY	
			D-MD-7411685-0-0		1	SIDE, POWER SUPPLY	
			D-MD-7411684-0-0		1	HOUSING COMP. CHASSIS	
		3	E-AD-7011486-0-0		2	TRANSFORMER ASSY	
			C-MD-7414301-0-0		1	COVER	
		4	D-AD-7014420-0-0		2	AC INPUT BOX ASSY	
			A-DC-7412303-0-1		1	DECAL 115V	
X			D-AD-7012500-0-0		1	POWER CORD	
			A-DC-7412380-0-1		1	DECAL 230V	
		5	D-IA-7009812-0-0	A	1	CHASSIS COMPONENT MTG.	
			D-IA-7411765-0-0		1	PLATE SWITCH	
			D-IA-7411766-0-0	B	1	PLATE COMPONENT MTG.	

CUSTOMER PRINT SET 1	MFG. SET	FIND NO.	DRAWING NO.	REV	NO OF SHT	DESCRIPTION	OPTION NO./FILE DATE
			MECHANICAL				
		6	D-UA-5413089-0-0			PILOT CONTROL BOARD	
		8	B-DD-H744-Ø		2	DRAWING DIRECTORY H744	
		9	B-DD-H745-Ø		2	DRAWING DIRECTORY H745	
		10	B-DD-H754-Ø		3	DRAWING DIRECTORY H754	
		11	D-IA-7009949-0-0		1	COVER, POWER SUPPLY	
			C-MD-7412473-0-0		1	STRIP, CLAMP	

CUSTOMER PRINT SET CODES	X = PRINT OF DOCUMENT INCLUDED IN PRINT SET C = INCLUDES ALL PRINTS INDICATED ON DOCUMENT S = CONFIDENTIAL AUTHORIZED SIGNATURE REQUIRED	TITLE	DRAWING DIRECTORY POWER SUPPLY H765	SHEET 4 OF 5	SIZE	CODE	NUMBER	REV
					B	DD	H765-Ø	R

MECHANICAL

CUSTOMER PRINT SET	MFG. SET	FIND NO.	DRAWING NO.	REV	NO OF SHT	DESCRIPTION	OPTION NO./FILE DATE
1		12	D-CS-5410864-0-1		3	POWER DIST. BD. ASSY	
			C-MD-7412192-0-0		1	SHIELD	
			D-MD-7411704-0-0		1	BRACKET, CONN. MTG.	
			C-IA-9305937-0-0			MATE-N-LOK FIXTURES	
			D-IA-5010863-0-0		1	ETCHED CIRCUIT BD.	
			K-CO-5410864-0-4			X-Y COORDINATE HOLE LOC.	
			D-AH-5410864-0-5		1	ASSY DRILLING HOLE LAYOUT	
			B-MH-5410864-0-6		1	MODULE ECO HISTORY	
			5010863		REF	ETCH CIRCUIT BOARD	
	X	13	A-SP-3700174-0-0	-	2	PACKAGING INSTRUCTIONS	
			A-PS-9905664-0-0	-	2	REGULAR SLOTTED CARTON	
			A-PS-9905665-0-0	-	2	LAMINATED BUILDUP	
		14	D-AH-5411086-0-5		1	ASSY DRILLING HOLE LAYOUT	
			B-MH-5411086-0-6		1	MODULE ECO HISTORY	
		15	D-AD-7011486-0-0		1	ASSEMBLY DRAWING	
		16	D-AH-5411689-0-5		1	ASSY DRILLING HOLE LAYOUT	
			D-MH-5411689-0-6		1	MODULE ECO HISTORY	

CUSTOMER PRINT SET	MFG SET	FIND NO.	DRAWING NO.	REV	NO OF SHT	DESCRIPTION	OPTION NO./FILE DATE

CUSTOMER PRINT SET CODES

X = PRINT OF DOCUMENT INCLUDED IN PRINT SET
C = INCLUDES ALL PRINTS INDICATED ON DOCUMENT
S = CONFIDENTIAL AUTHORIZED SIGNATURE REQUIRED

TITLE: DRAWING DIRECTORY
POWER SUPPLY H765

SHEET 5 OF 5 | SIZE B | CODE DD | NUMBER H765-Ø | REV R

DRB 108

DEC 16-(325)-1062-2B-R972

"THIS DRAWING AND SPECIFICATIONS, HEREIN, ARE THE PROPERTY OF DIGITAL EQUIPMENT CORPORATION AND SHALL NOT BE REPRODUCED OR COPIED OR USED IN WHOLE OR IN PART AS THE BASIS FOR THE MANUFACTURE OR SALE OF ITEMS WITHOUT WRITTEN PERMISSION.
COPYRIGHT © 1975, DIGITAL EQUIPMENT CORPORATION"

LEGEND	
NUMBER	VARIATION
H765-A	120V 50/60 HZ
H765-B	240V 50/60 HZ
H765-C	120V 50/60HZ NO H754
H765-D	240V 50/60HZ NO H754
H765-P	120V 50/60 HZ NO REG
H765-R	240V 50/60 HZ NO REG

NOTES CON'T.

10. ITEM 16 & 56 (SCREW & WASHER) TO BE USED TO MOUNT 54-11086 (ITEM 4) IN AC INPUT BOX (ITEM 2 OR 3) IN A,B,C,D VERSION. IN P&R VERSION INSTALL SCREW & WASHER IN MOUNTING HOLES. THEY WILL BE USED ON A HIGHER ASSEMBLY.

NOTES

~~1. SEE TRANSFORMER ASSY E-AD-7010014 SHEET 2 FOR ISOMETRIC ORIENTATION OF CLAMP & PLUG WIRES.~~

2. TIGHTEN FAN SCREWS TO 10 IN-LBS WITH A TORQUE SCREW DRIVER.

~~3. USE ITEM #41 IN PLACE OF ITEM #25 WHEN USING ROTRON FANS.~~

4. INSTALL A.B.S. VINYL, VIEW B-B ITEM #42 AND #43. CENTER 1/4 INCH FROM BOTTOM AND SIDES ON INSIDE WALL.

~~5. USE EXTERNAL TOOTH WASHER UNDER MOUNTING SCREW HEAD OF REV.D TRANSFORMERS ONLY.~~

~~6. GREEN/YEL GROUND WIRE FROM TRANSFORMERS TO BE FASTENED UNDER REGULATOR MOUNTING SCREW.~~

~~7. IN EARLIER VERSIONS OF THE TRANSFORMER ASSEMBLY A CABLE CLAMP WAS USED IN PLACE OF THE 5 TIE WRAPS TO DRESS THE TRANSFORMER WIRES ALONG THE TRANSFORMER BODY.~~

8. ITEM 7 - H754 IS NOT USED IN VARIATIONS C & D.

9. ITEM 53 IS TO BE USED TO PREVENT CORROSION OF CHASSIS AT GROUND STUD.

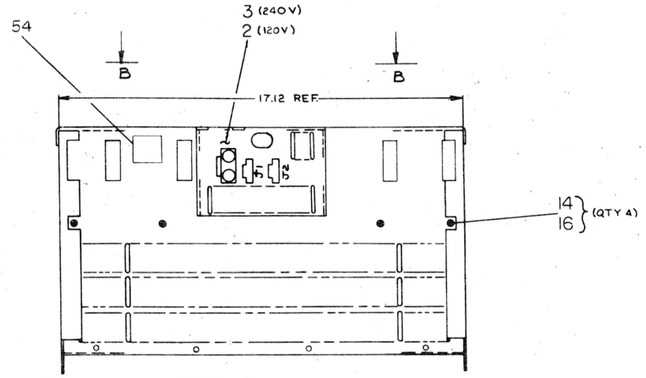

REAR VIEW

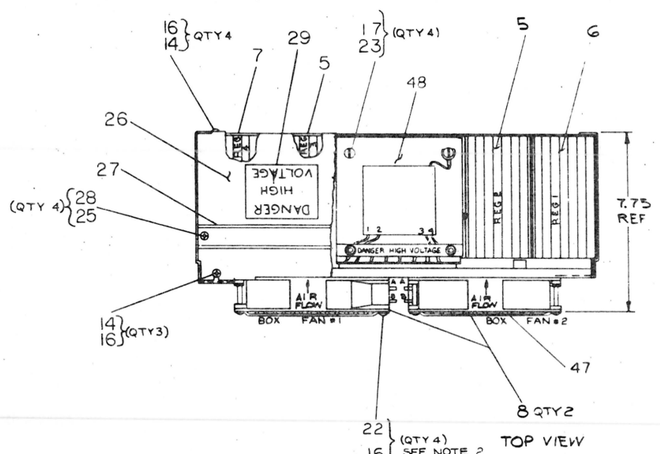

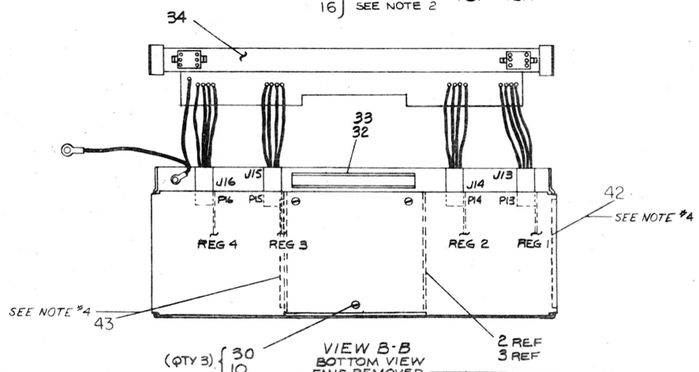

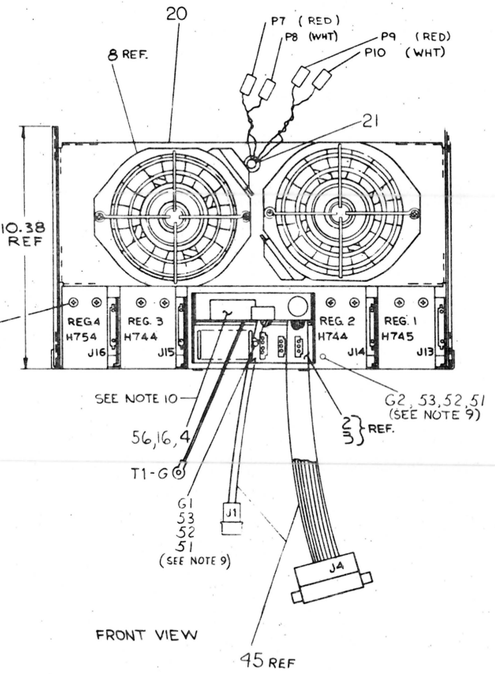

H765-R	H765-P	H765-D	H765-C	H765-B	H765-A	QTY.	DESCRIPTION	PART NO.	ITEM NO.
4	4	4	4	4	4		SCR PH HD 6-32 X 1/4	9006020-1	56
1	1	1	1	1	1		CABLE GND	70138825-02	55
1	1	—	—	—	—		DECAL	A-DC-7918261-0-0	54
A/R	A/R	A/R	A/R	A/R	A/R		GREASE CONDUCTOR	4901173-01	53
2	2	2	2	2	2		WASHER, LOCK EXT TOOTH #8-32	9008072	52
2	2	2	2	2	2		NUT, KEP #8-32	9006563	51
~~2~~	~~2~~	~~2~~	~~2~~	~~2~~	~~2~~		~~TERMINAL, RING BLUE~~	~~9001928~~	~~50~~
~~A/R~~	~~A/R~~	~~A/R~~	~~A/R~~	~~A/R~~	~~A/R~~		~~WIRE, 14AWG GRN/YEL~~	~~9107377-36~~	~~49~~
1	1	1	1	1	1		TRANSFORMER ASSEMBLY	E-AD-7011486-0-0	48
2	2	2	2	2	2		FAN GUARD	1212561	47
—	—	—	—	~~4~~	~~4~~		~~KEPS NUTS #10-32~~	~~9006265~~	~~46~~
1	1	1	1	1	1		HARNESS INTERCONN.	D-IA-7010138-0-0	45
—	—	—	—	REF	REF		WASH EXT TOOTH #10	9007681	44
1	1	1	1	1	1		A.B.S. VINYL 4.75 X 3.5	1210984-03	43
1	1	1	1	1	1		A.B.S. VINYL 4.75 X 6	1210984-04	42
—	—	—	—	REF	REF		SCR, PH HD 6-32 X 0.25	9007818-1	41
REF	REF	REF	REF	REF	REF		TEST PROCEDURE	A-SP-H765-0-1	40
REF	REF	REF	REF	REF	REF		TESTER C.S.	A-CS-H765-TA-1	39
REF	REF	REF	REF	REF	REF		TESTER U.A.	E-UA-H765-TA-1	38
REF	REF	REF	REF	REF	REF		TESTER P.L.	A-PL-H765-TA-0	37
REF	REF	REF	REF	REF	REF		H765 POWER SUPPLY ASSEMBLY PROCEDURE	A-SP-H765-0-9	36
REF	REF	REF	REF	REF	REF		PACKAGING INSTRUCTIONS	A-SP-3700174-00	35
—	—	1	1	1	1		PWR DISTRIBUTION BD	D-CS-5410864-0-1	34
A/R	A/R	A/R	A/R	A/R	A/R		PERMA BOND	9009157	33
A/R	A/R	A/R	A/R	A/R	A/R		GROMMET STRIP	9008291	32
4	4	4	4	4	4		TIE WRAP 1/8 W.	9007680	31
3	3	3	3	3	3		WASH, C'SK #6	9008270	30
1	1	—	—	1	1		STICKER DANGER HIGH VOLTAGE	3610267	29
4	4	4	4	4	4		WASH, INT TOOTHLOCK #8	9006634	28
1	1	—	—	1	1		TROUGH, WIRE	D-IA-7009450-0-0	27
1	1	—	—	1	1		COVER, POWER SUPPLY	D-IA-7009949-0-0	26
4	4	4	4	4	4		SCR. PH HD TRUSS #8-32X.62	9006040-3	25
—	—	—	—	~~4~~	~~4~~		~~KEPS NUTS #10-32~~	~~9006565~~	~~24~~
4	4	4	4	4	4		SCR PH HD TRUSS10-32X.50	9006073-3	23
4	4	4	4	4	4		SCR PH HD TRUSS6-32X1.75	9006031-3	22
1	1	1	1	1	1		GROMMET .501 D	9007016	21
1	1	1	1	1	1		CHASSIS, POWER SUPPLY	E-IA-7009752-0-0	20
—	—	—	—	REF	REF		CLAMP, CABLE	D-IA-7013887-0-0	19
—	—	—	—	~~8~~	~~8~~		~~SCR PHHD FL #6-40X.50~~	~~9006013-2~~	~~18~~
—	—	10	10	12	12		WASH INT TOOTH #10	9006635	17
11	11	17	17	17	17		WASH INT TOOTH #6	9006633	16
—	—	6	6	8	8		SCR PH HD TRUSS 10-32X.25	9008007-3	15
7	7	11	11	11	11		SCR PHHD TRUSS6-32X.25	9006020-3	14
—	—	—	—	~~1~~	~~1~~		~~DECAL NEMA~~	~~A-DC-5003438-0-0~~	~~13~~
—	—	—	—	~~1~~	~~1~~		~~DECAL UL~~	~~A-DC-5003441-0-0~~	~~12~~
—	—	—	—	~~2~~	~~2~~		~~SCR, PHL FLT HD 6-32X.31~~	~~9006064-6~~	~~11~~
3	3	3	3	3	3		SCR, PHL FLT HD 6-32X.31	9008404-2	10
—	—	—	—	~~2~~	~~2~~		~~NUTS, CL-18~~	~~9009105~~	~~9~~
2	2	2	2	2	2		FAN, 115 V AC 50/60HZ	1211714	8
—	—	—	—	1	1		+20V REGULATOR (H784)	B-DD-H754-0	7
—	—	1	1	1	1		-15 V REGULATOR (H745)	B-DD-H745-0	6
—	—	2	2	2	2		+5 V REGULATOR (H744)	B-DD-H744-0	5
—	—	1	1	1	1		PWR. BD. (+15V REG)	E-IA-5411086	4
1	—	1	—	1	—		AC INPUT BOX ASSY 230V	D-AD-7014420-2-0	3
—	1	—	1	—	1		AC INPUT BOX ASSY. 115V	D-AD-7014420-1-0	2
—	—	—	—	~~1~~	~~1~~		~~TRANSFORMER ASSY~~	~~D-AD-7010014-0-0~~	~~1~~

FIRST USED ON OPTION/MODEL	BA11-K	PARTS LIST	
DIMENSIONAL TOLERANCE	DIMENSIONS ARE NOMINAL UNLESS OTHERWISE SPECIFIED	DRN. R.P. Simpson 6-24-76	digital
MILLIMETERS: X.X ±0.10, XX ±0.8, X ±0.1	INCHES: .XXX ±.005, .XX ±.03, X ±0.1	CHK'D. R. Kenney 6-24-76	
ANGLES: ±0° 30'	THIRD ANGLE PROJECTION	ENG. R. Kenney 6-23-76	TITLE: POWER SUPPLY H765
REMOVE BURRS AND BREAK SHARP CORNERS SURFACE QUALITY		PROD. A. Wolf 6-25-76	
MATERIAL: SEE PARTS LIST	FINISH	DRAWING E. Porreca 6-25-76	
NEXT HIGHER ASSY. B-DD H765-0	SCALE NONE	SIZE E	CODE UA
SHEET OF 2		NUMBER H765-Ø-Ø	REV. U
		DIST.	

REVISIONS			
REV	DESCRIPTION	DATE	APPROVED
R	ECO M765-00001	8 SEP 75	P. PORRECA
S	ECO M765-00002	16 OCT 75	P. PORRECA
T	ECO M765-00003	15 OCT 75	A. WOLF
U	ECO M765-00004	15 OCT 75	R. KENNEY
V	ECO M765-00005	4 NOV 75	P. PORRECA
W	ECO M765-00006	4 NOV 75	P. PORRECA
L	ECO M765-00007	20 JAN 76	G. NAVEDONSKY
M	ECO M765-00008	13 SEP 75	A. WOLF
N	ECO M765-00009	13 SEP 75	A. WOLF
P	ECO M765-00010	2 FEB 76	P. PORRECA
H	ECO M765-00011	2 FEB 76	G. NAVEDONSKY
J	ECO M765-00012	17 FEB 76	P. PORRECA
K	ECO M765-00013	25 OCT 76	A. WOLF
E	ECO M765-00014	15 OCT 76	A. WOLF
D	ECO M765-00015	15 OCT 76	A. WOLF
C	ECO M765-00016	15 OCT 76	A. WOLF
B	ECO M765-00017	15 OCT 76	A. WOLF
A	ECO M765-00018	15 OCT 76	A. WOLF

UA H765-Ø-Ø

CONNECTION TABLE		
FROM CONNECTION	TO CONNECTION	SIGNALS
P2 FROM TRANS. ASSY	J2 FROM +15V REG.	28 VAC
J16 FROM PWR. DIST. BD.	P16 LOCATED ON REG.#4 (H754)	GND, -5V, +20V 28 VAC
J15 FROM PWR. DIST. BD	P15 LOCATED ON REG.#3 (H744)	GND, +5V, 28 VAC
J14 FROM PWR DIST. BD	P14 LOCATED ON REG.#2 (H744)	GND, +5V, 28 VAC
J13 FROM PWR DIST. BD	P13 LOCATED ON REG.#1 (H745)	GND, +15V, -15V 28 VAC
GND LUG LOCATED ON PWR. DIST. BD. G3	G1 YEL LUG	SAFTY GROUND
P1 FROM TRANS ASSY	J1 LOCATED ON PWR. DIST. BD	28 VAC

CONNECTION TABLE		
FROM CONNECTION	TO CONNECTION	SIGNALS
P4 FROM +15V REG.	J2 LOCATED ON PWR DIST BD	-15V, LTC L, AC LO L, DC LO L, GND
P5 FROM TRANS. ASSY	J5 LOCATED ON AC INPUT BOX	120/240 VAC
P7 (RED)	FAN #1-A	120 VAC - HOT
P8 (WHT)	FAN #1-B	120 VAC - NEUTRAL
P9 (RED)	FAN #2-A	120 VAC - HOT
P10 (WHT)	FAN #2-B	120 VAC - NEUTRAL
T1-G	G1	SAFETY GROUND
G1	G2	ITEM 55

240 V
7014420-2
AC INPUT BOX

120 V
7014420-1
AC INPUT BOX

7011751
CAP MOV BOARD ASSY

TRANS ASSY
7011486

5411689
CAP MOV ASSEMBLY

AC POWER CONTROL
54-13089

1214380
K1

SEE NOTE 8

POWER DISTRIBUTION BOARD
5410864-YA

REG #4 H754/H785

REG #3 H744

REG #2 H744

REG #1 H745

7010138 HARNESS

+15V DC REGULATOR 5411086

11/05-S CONSOLE PWR.

CHASSIS GROUND G2

COMMON SIGNAL NAMES FOR 6 PIN AND 15-PIN MATE-N-LOKS ON POWER DISTRIBUTION BOARD

6-PIN	15 PIN
1 - GND	1 - +5V
2 - LTC L	2 - +15V
3 - DC LO L	3 - +20V
4 - AC LO L	4 - +5V
5 - SPARE 4	5 - GND
6 - SPARE 5	6 - SPARE 1
	7 - GND
	8 - GND
	9 - GND
	10 - SPARE 2
	11 - GND
	12 - SPARE 3
	13 - -15V
	14 - -5V
	15 - SPARE 3

REMOTE POWER CONTROL
1-3 : ON
2-3 : OFF

CPU CONSOLE POWER SWITCH
1-3 : ON

REVISIONS		
CHK	CHANGE NO.	REV.

TITLE	SIZE	CODE	NUMBER	REV
POWER SUPPLY H765	E	UA	H765-0-0	U
SCALE —	SHEET 2 OF 2		DIST.	

"THIS DRAWING AND SPECIFICATIONS, HEREIN, ARE THE PROPERTY OF DIGITAL EQUIPMENT CORPORATION AND SHALL NOT BE REPRODUCED OR COPIED OR USED IN WHOLE OR IN PART AS THE BASIS FOR THE MANUFACTURE OR SALE OF ITEMS WITHOUT WRITTEN PERMISSION.
COPYRIGHT © 1977 , DIGITAL EQUIPMENT CORPORATION"

NOTES:

1. LEAVE .5 IN ±.2 IN OF OUTER INSULATION OF LINE CORD INSIDE BOX.
2. REMOVE PAINT MASK FROM G1 ONLY AND APPLY CONDUCTIVE GREASE TO AREA AROUND STUD G1 BEFORE INSTALLING ITEMS #31 (LOCKWASHER), LUG ON GRN/YEL WIRE AND #20 (HEXNUT).
3. ENSURE THAT LUG CONNECTED TO GRN/YEL WIRE FROM LINE CORD, WASHER ITEM #31, AND HEXNUT ITEM #2C ARE THE FIRST ITEMS INSTALLED ON G1. SEE DETAIL "A". APPLY 22 ±1 IN LBS. OF TORQUE TO BOTH HEX NUTS ON GROUND STUD.
4. STRIP LENGTH FOR ITEM #36 AND ITEM #29 SHALL BE .250 ± .015.
5. STRIP LENGTH FOR ITEM #37
   A. HAND CRIMP .187 ± .015
   B. AUTOMATIC STRIP .156 ± .015
6. STRIP LENGTH FOR ITEM #35
   A. HAND CRIMP .203 ± .015
   B. AUTOMATIC STRIP .182 ± .015

LEGEND	
NUMBER	VARIATION
7014420-1	120V 47-63HZ 12A
7014420-2	240V 47-63HZ 6A

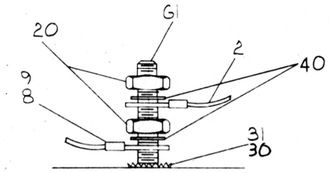

DETAIL "A"
SEE NOTES 2 & 3

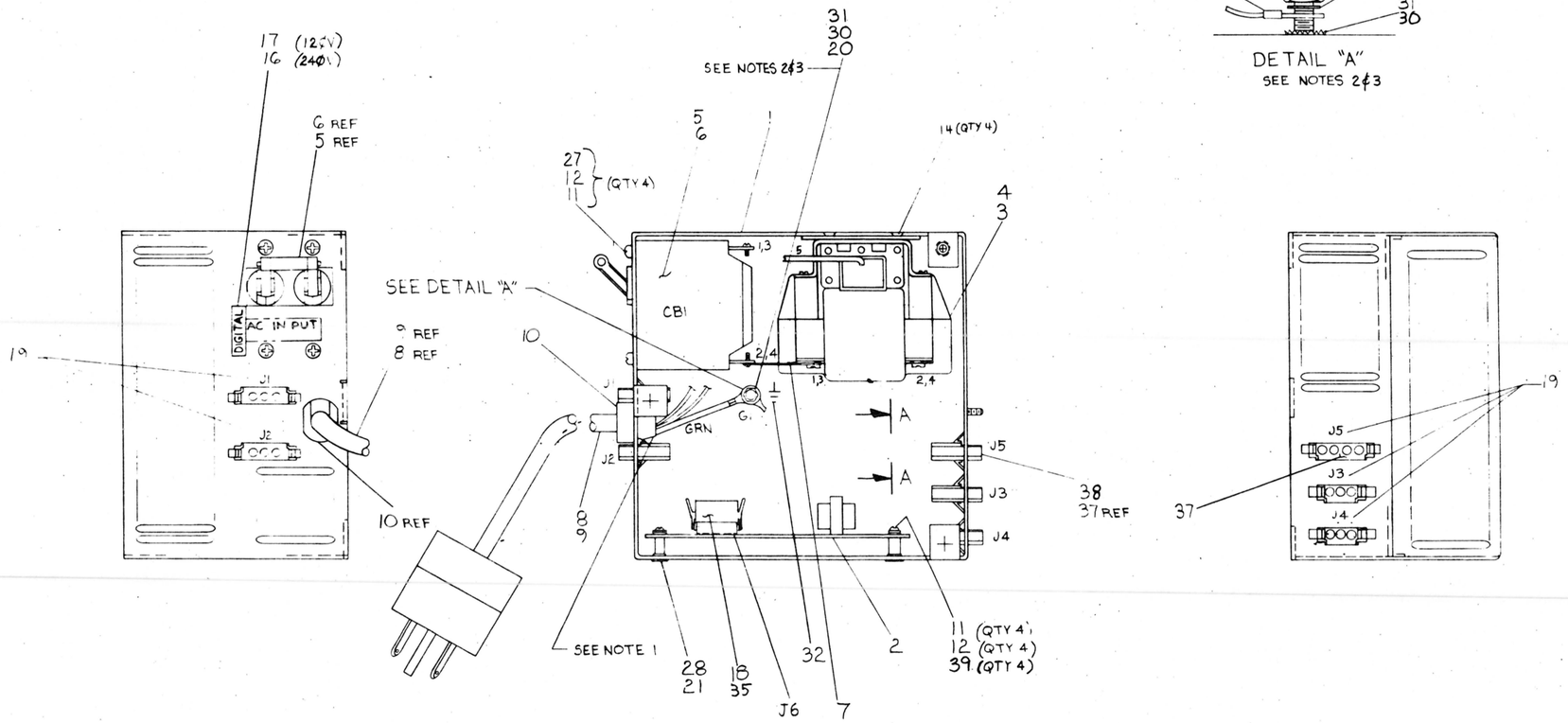

CAUTION:
OFF SHEET PARTS LIST EXIST
K-PL-7014420-0-DBP

REVISIONS			
CHK	CHANGE NO.	REV.	
R.K.	7014420-00001	A	R. KENNEDY
E.R.	7014420-00002	B	W.F. BAUSHA
K.H.	7014420-ML003	C	7014420-ML003 11 MAR 81 A. BARON
K.H.	7014420-ML004	D	7014420-ML004 3 MAR 81 A. BARON

MANUFACTURING RELEASE

DEC FORM NO. DOC 1.00-C

DESCRIPTION	DWG./PART NO.	ITEM NO.
UNLESS OTHERWISE SPECIFIED DIMENSIONS ARE IN INCHES		

ANGLES ±0° 30'	CLASS OF ACCURACY	NOMINAL DIMENSION RANGE INCHES					
SURFACE QUALITY IN MICROINCHES (CHECK ONE)		OVER 0 TO 0.2	OVER 0.2 TO 1.2	OVER 1.2 TO 4.0	OVER 4.0 TO 12.0	OVER 12.0 TO 40.0	OVER 40.0 TO 80.0
	MEDIUM ☐	±.004	±.008	±.012	±.016	±.024	±.04
	PREFERRED ☐	±.012	±.016	±.026	±.04	±.063	±0.1

QUANTITY & VARIATION

THIRD ANGLE PROJECTION

REMOVE BURRS AND BREAK SHARP CORNERS

DO NOT SCALE DWG

DRN	M. Hannah	6-30-77
CHK'D	S. Kittle	7-26-77
ENG.	L. Dion	9-27-77
PROJ. ENG	[illegible]	[illegible]
PROD.	[illegible]	[illegible]

NEXT HIGHER ASSY.

MATERIAL: SEE: K-PL-7014420-0-DBP

FINISH

E-UA-H765-0-0

SCALE

SHEET 1 OF 2

FIRST USED ON: H765

digital

TITLE: AC INPUT BOX ASSY

SIZE	CODE	NUMBER	REV.
D	AD	7014420-0-0	D

DIST.

ML-1

"THIS DRAWING AND SPECIFICATIONS, HEREIN, ARE THE PROPERTY OF DIGITAL EQUIPMENT CORPORATION AND SHALL NOT BE REPRODUCED OR COPIED OR USED IN WHOLE OR IN PART AS THE BASIS FOR THE MANUFACTURE OR SALE OF ITEMS WITHOUT WRITTEN PERMISSION.
COPYRIGHT © 1977 DIGITAL EQUIPMENT CORPORATION"

WIRE TABLE-1 VAR 120V

ITEM NO	DESCRIPTION AWG.	COLOR	FROM STRIP LENGTH	FROM CONN.	FROM WITH	TO STRIP LENGTH	TO CONN.	TO WITH	PRECUT WIRE LENGTH
6	14	GRN/YEL	SEE NOTE 3	PC-1			G1		
8	14	BRN		PC-2			CB1-1		
8	14	BLU		PC-3			CB1-3		
33	18	BLU	SEE NOTE4	K2-4	36	SEE NOTE 5	J5-2	37	3.0 ± 0.25
							J5-4	37	3.0± 0.25
34	18	BRN	SEE NOTE4	K2-2	36		J5-1	37	3.0± 0.25
						SEE NOTE 5	J5-3	37	3.0± 0.25
34	18	BRN	SEE NOTE4	K2-1	36	SEE NOTE 6	PG-2	35	3.5± 0.25
3	18	YEL				———	K2-6	—	3.5± 0.25
7	——	—	———	K2-1	—	———	CB1-2	—	STRAP
33	18	BLU	SEE NOTE4	K2-3	29	SEE NOTE 6	PG-3	35	3.0 ± 0.25
7	——	—	———	K2-3	—	———	CB1-4	—	STRAP
3	18	YEL	SEE NOTE4	K2-5	—	SEE NOTE 6	PG-4	35	4.75 ± 0.25
2	18	GRN/YEL	SEE NOTE 6	BD-1			G1		

WIRE TABLE-2 VAR 240V

ITEM NO	DESCRIPTION AWG	COLOR	FROM STRIP LENGTH	FROM CONN	FROM WITH	TO STRIP LENGTH	TO CONN	TO WITH	PRECUT WIRE LENGTH
9	14	GRN/YEL	SEE NOTE 3	PC-1			G1		
9	14	BRN		PC-2			CB1-1		
9	14	BLU		PC-3			CB1-3		
33	18	BLU	SEE NOTE4	K2-4	29	SEE NOTE 5	J5-4	37	3.0± 0.25
34	18	BRN	SEE NOTE 4	K2-2	29	SEE NOTE 5	J5-1	37	3.0±0.25
34	18	BRN	SEE NOTE 5	J5-2	37	SEE NOTE 5	J5-3	37	2.0±0.25
34	18	BRN	SEE NOTE 4	K2-1	36	SEE NOTE 6	PG-1	35	3.5±0.25
4	18	YEL				———	K2-6	—	3.5±0.25
7	——	——	———	K2-1	—	———	CB1-2	—	STRAP
33	18	BLU	SEE NOTE4	K2-3	29	SEE NOTE 6	PG-3	35	3.0 ±0.25
7	——	——	———	K2-3	—	———	CB1-4	—	STRAP
4	18	YEL	———	K2-5	—	SEE NOTE 6	PG-4	35	4.75±0.25
2	18	GRN/YEL	SEE NOTE 6	BD-1			G1		

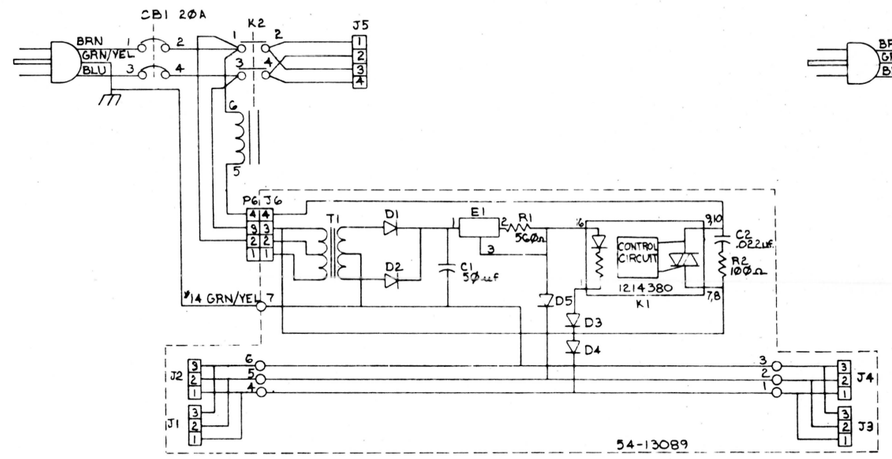

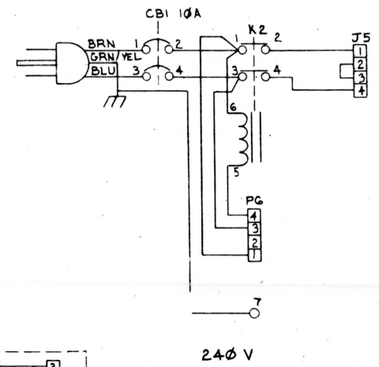

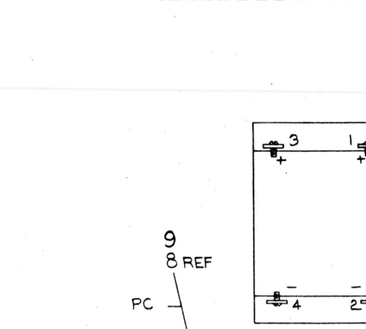

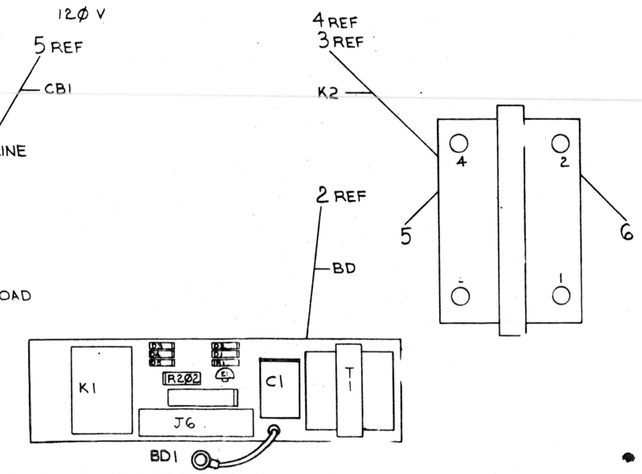

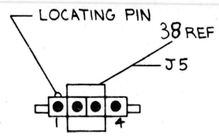

REVISIONS		
CHK	CHANGE NO.	REV.

TITLE	SIZE	CODE	NUMBER	REV.
AC INPUT BOX ASSY.	D	AD	7014420-0-0	D
SCALE —	SHEET 2 OF 2	DIST.	ML-1	

DEC FORM NO. DRD 137

"THIS DRAWING AND SPECIFICATIONS, HEREIN, ARE THE PROPERTY OF DIGITAL EQUIPMENT CORPORATION AND SHALL NOT BE REPRODUCED OR COPIED OR USED IN WHOLE OR IN PART AS THE BASIS FOR THE MANUFACTURE OR SALE OF ITEMS WITHOUT WRITTEN PERMISSION.
COPYRIGHT © 1977, DIGITAL EQUIPMENT CORPORATION"

NOTES:

1. CONNECTORS J4, J3, J2, J1 ARE NOT USED ON YA VARIATION.

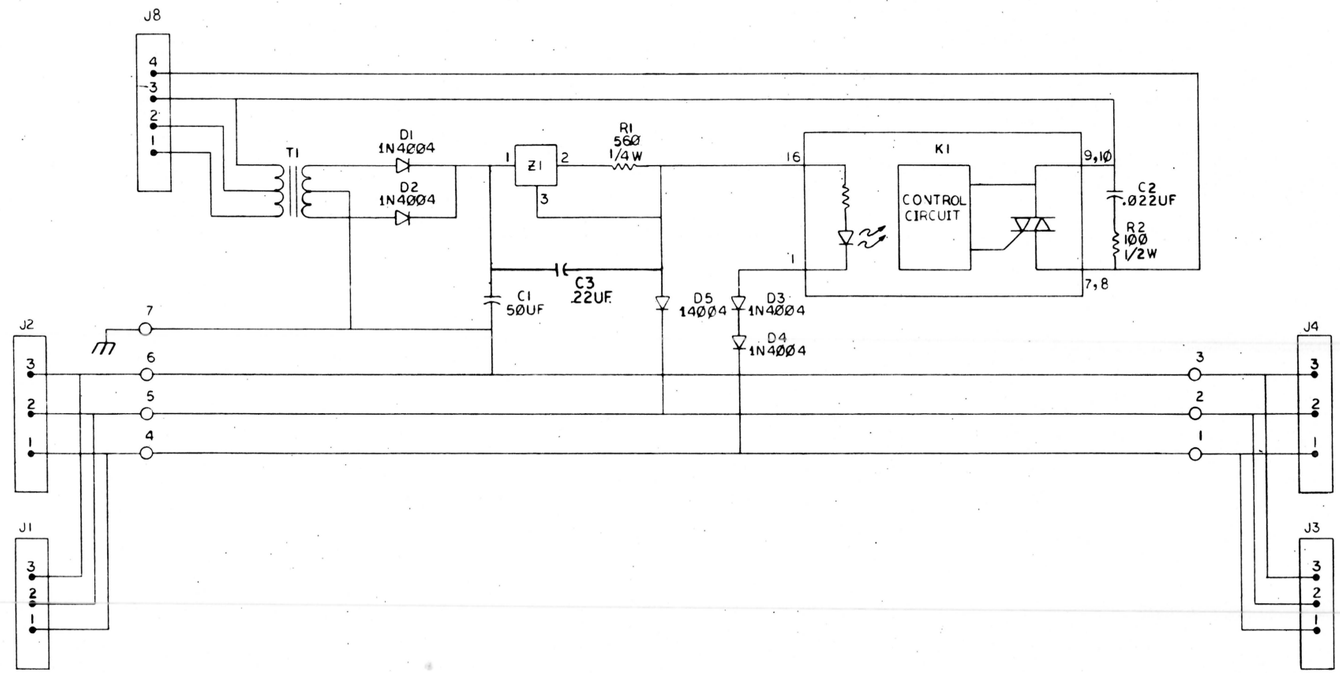

REVISIONS		
CHK	CHANGE NO.	REV.
R.G.	5413089-1	B
	R. KENNEDY 1-NOV-77	
	R. Kennedy 28 NOV 77	
	5413089-2	C
	R. KENNEDY	
	R. Kennedy 5 APR 78	
	5413089-3	D
	R. Kennedy 5-4-78	
	R. KENNEDY	
	R. Kennedy 5 MAY 78	
	5413089-4	E
	W. BAUSHA 1-4-78	
	W. Bausha 1/4/79	

DRN.		7/6/77
CHK'D		9/23/77
ENG.		9/23/77
PROJ. ENG.		23 SEP 77
PROD.		23 SEP 77
NEXT HIGHER ASSY.		
D-UA-5413089-0-0		
SCALE NONE		
SHEET 1 OF 1		

FIRST USED ON H765

digital

TITLE A.C. CONTROL BOARD

SIZE	CODE	NUMBER	REV.
D	CS	5413089-0-1	E

DIST.

SIZE D CODE CS NUMBER 5413089-0-1 REV. E

"THE MATERIAL HEREIN IS FOR INFORMATION PURPOSES ONLY AND IS SUBJECT TO CHANGE WITHOUT NOTICE. DIGITAL EQUIPMENT CORPORATION ASSUMES NO RESPONSIBILITY FOR ANY ERRORS WHICH MAY APPEAR HEREIN."

DRAWING DIRECTORY

"THIS DRAWING AND SPECIFICATIONS, HEREIN, ARE THE PROPERTY OF DIGITAL EQUIPMENT CORPORATION AND SHALL NOT BE REPRODUCED OR COPIED OR USED IN WHOLE OR IN PART AS THE BASIS FOR THE MANUFACTURE OR SALE OF ITEMS WITHOUT WRITTEN PERMISSION. COPYRIGHT © 1972, DIGITAL EQUIPMENT CORPORATION."

CUSTOMER PRINT SET

DRAWING DIRECTORY	B-DD-H744-0
CIRCUIT SCHEMATIC	D-CS-H744-0-1
UNIT ASSY	E-UA-H744-0-0
PARTS LIST	K-PL-H744-0-OBP

MPG SET

TEST PROCEDURE	A-SP-H744-0-3
MPG SPEC	A-SP-H744-0-8
PACKAGING INST	A-PI-3700074-0-0

UNIT VARIATIONS

VAR	TITLE
H744	+5V REGULATOR
H744-YA	2.0 - 8.0V VARIABLE REGULATOR

REVISIONS	REV.	R	S	T
	CHANGE NO.	00019	00020	H744-ML021
	CHK	GP	VA	Dick B.

USED ON OPTION/MODEL: 11/45

SHEET 1 OF 4

DRN.	D. FONTAINE	DATE 2-4-72
CHK'D.	D. FONTAINE	DATE 2-4-72
PROJ. ENG.	G. POTTER	DATE 2-24-72
PROD.	A. HIRSCH	DATE 2-24-72

TITLE: +5V REGULATOR

digital

SIZE	CODE	NUMBER	REV
a	DD	H744-0	T

DIST.

DRB 106A

ML1

SIZE	CODE	NUMBER	REV.
B	DD	H744-Ø	T

DRAWING NO.	NO OF SHTS	PART NO.	DESCRIPTION	REVISIONS
D-AH-H744-Ø-5			ASSY DRILLING/HOLE LAYOUT	Y Y Y Z
E-UA-H744-Ø-Ø	1		UNIT ASSY	Y Z AA AB
D-CS-H744-Ø-1	1		CIRCUIT SCHEMATIC	Y Y Y Z
B-MH-H744-Ø-6	4		MODULE ECO HISTORY	AD AE AE AF
		5009725	ETCHED BOARD	H H H H
A-SP-H744-Ø-3			TEST PROCEDURE	REF REF REF
A-SP-H744-Ø-8			MFG SPEC	REF REF REF
D-PS-1210737-Ø-Ø	1		HEAT SINK	REF REF REF
D-IA-5309756-Ø-Ø	1		REGULATOR BRK'T	REF REF REF
C-MD-5309760-Ø-Ø	1		COMPONENT COVER	REF REF REF
C-MD-5309759-Ø-Ø	1		CAPACITOR STRAP	REF REF REF
A-PI-3700074-Ø-Ø	2		PACKAGING INSTRUCTION	REF REF REF
A-PS-9905211-Ø-Ø	2		OUTER CARTON	REF REF REF
A-PS-9905212-Ø-Ø	2		INNER PACKAGING	REF REF REF
C-IA-7412388-Ø-Ø			2.5 CAP HOLDER	REF REF REF
C-MD-7419952-Ø-Ø			COMPONENT COVER	REF REF
K-PL-H744-C-DBP	3		PARTS LIST	- - - AB

NOTES:

REVISIONS			
DATE	CHG NO	REV	
2-77	00018	R	
3-78	00019	S	
3-81	00020	T	
	11021		

"THIS DRAWING AND SPECIFICATIONS, HEREIN, ARE THE PROPERTY OF DIGITAL EQUIPMENT CORPORATION AND SHALL NOT BE REPRODUCED OR COPIED OR USED IN WHOLE OR IN PART AS THE BASIS FOR THE MANUFACTURE OR SALE OF ITEMS WITHOUT WRITTEN PERMISSION.
COPYRIGHT © 1977, DIGITAL EQUIPMENT CORPORATION"

digital

USED ON OPTION/MODEL
11/45

DRN.	D. FONTAINE	2-4-72
CHK'D	D. FONTAINE	2-4-72
ENG.	G. POTTER	2-24-72
PROD.	A. HIRSCH	2-24-72

TITLE: +5V REGULATOR

SIZE	CODE	NUMBER	REV.
B	DD	H744-Ø	T

SHEET 2 OF 4

DRB 126 B4-U1149-16-N1761325J

MLI

SIZE	CODE	NUMBER	REV.
B	DD	H744-0	T

DRAWING NO.	NO. OF SHTS	PART NO.	DESCRIPTION	REVISIONS
D-AS-H744-0-S			ASSY DRILLING/HOLE LAYOUT	Y Y Z
E-UA-H744-0-0	1		UNIT ASSY	W W1 AB
D-CS-H744-0-1	1		CIRCUIT SCHEMATIC	W W1 Z
B-MH-H744-0-6	4		MODULE ECO HISTORY	AC AB AF
		5009725	ETCHED BOARD	H H H
A-SP-H744-0-3			TEST PROCEDURE	REF REF
A-SP-H744-0-8			MFG SPEC	REF
D-PS-1210737-0-0	1		HEAT SINK	REF
D-IA-5309756-2-0	1		REGULATOR BRK'T	REF
C-MD-5309760-2-0	1		COMPONENT COVER	REF
C-MD-5309759-2-0	1		CAPACITOR STRAP	REF
A-PI-3700074-2-0	2		PACKAGING INSTRUCTION	REF
A-PS-9905211-2-0	2		OUTER CARTON	REF
A-PS-9905212-2-0	2		INNER PACKAGING	REF
C-IA-7412380-2-0			2.5 CAP HOLDER	REF
C-MD-7419952-2-0			COMPONENT COVER	REF REF
K-PL-H744-0-OSP	3		PARTS LIST	AB

NOTES:

REVISIONS	DATE	CHG NO	REV
	2-77	00017	R
	3-81	00019	T
		H744 M021	

"THIS DRAWING AND SPECIFICATIONS, HEREIN, ARE THE PROPERTY OF DIGITAL EQUIPMENT CORPORATION AND SHALL NOT BE REPRODUCED OR COPIED OR USED IN WHOLE OR IN PART AS THE BASIS FOR THE MANUFACTURE OR SALE OF ITEMS WITHOUT WRITTEN PERMISSION. COPYRIGHT © 1977, DIGITAL EQUIPMENT CORPORATION"

digital

USED ON OPTION/MODEL		DRN.		TITLE
11/45		D. FONTAINE	2-4-72	+5V REGULATOR
		CHK'D D. FONTAINE	2-4-72	
		ENG. G. POTTER	2-24-72	SIZE B CODE DD NUMBER H744-0 REV T
		PROD. A. HIRSCH	2-24-72	SHEET 3 OF 4

DRB 126 EN-01149-18-N176(325)

MLI

SIZE	CODE	NUMBER	REV.
B	DD	H744-Ø	T

DRAWING NO.	NO. OF SHTS	PART NO.	DESCRIPTION	REVISIONS		
D-AH-H744-Ø-5			ASSY DRILLING/HOLE LAYOUT	Y	Y	Z
E-UA-H744-Ø-Ø	1		UNIT ASSY	V	V1	AB
D-CS-H744-Ø-1	1		CIRCUIT SCHEMATIC	W	W1	Z
B-MH-H744-Ø-5	4		MODULE ECO HISTORY	AB	AE	AF
		5009725	ETCHED BOARD	H	H	H
A-SP-H744-Ø-3			TEST PROCEDURE	REF		REF
A-SP-H744-Ø-8			MFG SPEC	REF		
D-PS-1210737-Ø-Ø	1		HEAT SINK	REF		
D-IA-5309756-Ø-Ø	1		REGULATOR BRK'T	REF		
C-MD-5309760-Ø-Ø	1		COMPONENT COVER	REF		
C-MD-5309759-Ø-Ø	1		CAPACITOR STRAP	REF		
A-PI-3700074-Ø-Ø	2		PACKAGING INSTRUCTION	REF		
A-PS-9905211-Ø-Ø	2		OUTER CARTON	REF		
A-PS-9905212-Ø-Ø	2		INNER PACKAGING	REF		
C-IA-7412388-Ø-Ø			2.5 CAP HOLDER	REF		
C-MD-7419952-Ø-Ø			COMPONENT COVER	REF		REF
K-PL-H744-Ø-DBP	3		PARTS LIST			AB

NOTES:

REVISIONS		
DATE	CHG NO	REV
2-77	00016	R
3-81	00019	T
	H744-ML021	

"THIS DRAWING AND SPECIFICATIONS, HEREIN, ARE THE PROPERTY OF DIGITAL EQUIPMENT CORPORATION AND SHALL NOT BE REPRODUCED OR COPIED OR USED IN WHOLE OR IN PART AS THE BASIS FOR THE MANUFACTURE OR SALE OF ITEMS WITHOUT WRITTEN PERMISSION. COPYRIGHT © 1977 DIGITAL EQUIPMENT CORPORATION"

digital

USED ON OPTION/MODEL	
11/45	

DRN.	D. FONTAINE	2-4-72
CHK'D	D. FONTAINE	2-4-72
ENG.	G. POTTER	2-24-72
PROD.	A. HIRSCH	2-24-72

TITLE: +5V REGULATOR

SIZE	CODE	NUMBER	REV.
B	DD	H744-Ø	T

SHEET 4 OF 4

DRB 126 EN-01149-16-N176(326)

ML1

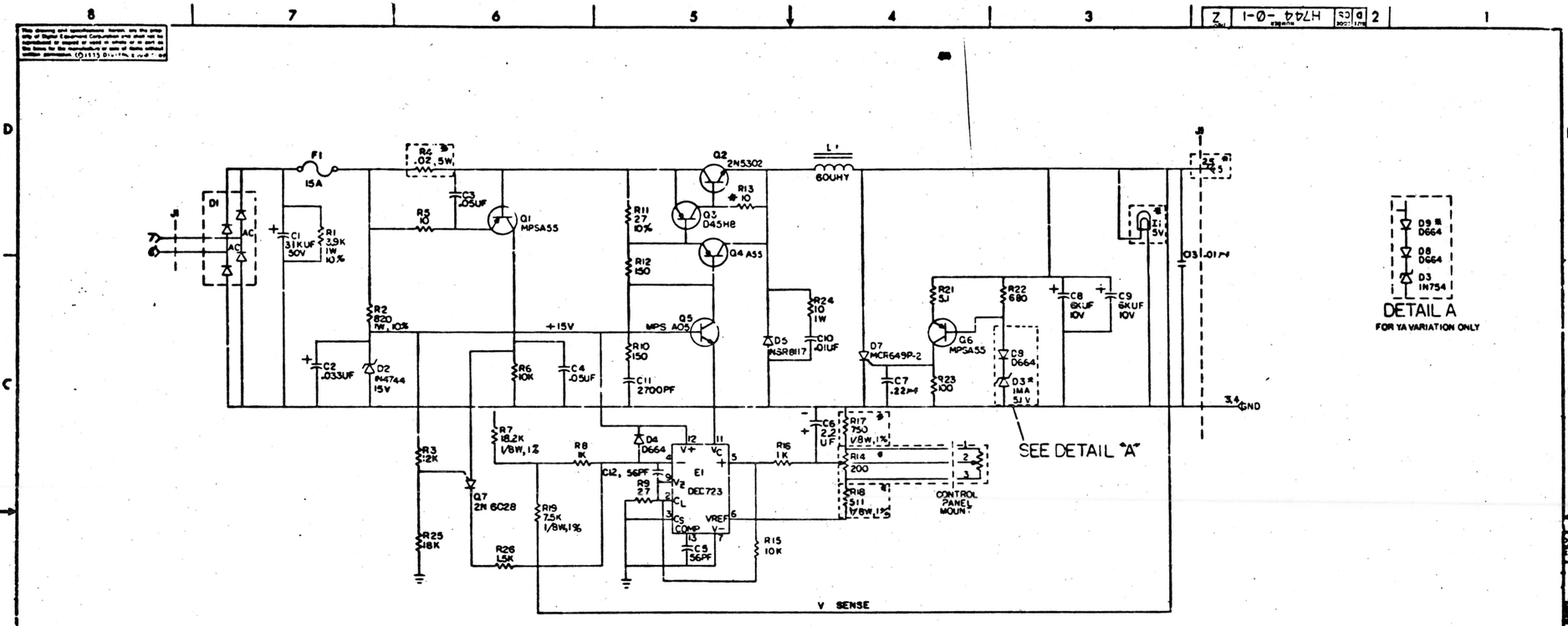

*FUSIBLE RESISTOR

(YA) FOR YA VARIATION COMPONENT VALUES ARE AS FOLLOWS:-
R4 - .06 5W
R14 - 1K 10 TURN
R17 - 300 1/8W 1%
R19 - 150 1/4W 5%
D3 - 1N754
I1 - 15V
J8-2,5 - +2.0-8.0V

D9 - D664 ADDED FOR YA VARIATION ONLY

UNLESS OTHERWISE INDICATED:
RESISTORS ARE 1/4W, 5%

QTY	REF DESIGNATION	DESCRIPTION	PART NO.	ITEM NO.

PARTS LIST

ETCH BOARD REV F H

DEC NO.	EIA NO.	DEC NO.	EIA NO.
1964A	SAME	MPSA55	
D664	NG606	2N5302	
MCR649P2		D45H8	
1751A	SAME	MPSA05	
1N754	SAME		
1N8117			
2N6028			

SEMICONDUCTOR CONVERSION CHART

REVISIONS			
REV	CHANGE NO.	CHK	
E	H744-00001	E.L.	1-14-72
F	H744-00002	G.POTTER	2-22-72

DRN A.Baron 2-3-71
CH'D Allen Hicks 2-3-71
ENG'G [illegible] 2/3/71
PROJ'T [illegible] 2/3/71
PROD [illegible] 2/3/71
NEXT HIGHER ASSY

EQUIPMENT CORPORATION

TITLE
+5V REGULATOR

SIZE CODE D | NUMBER CS H744-0-1 | REV Z
SCALE
SHEET 1 OF 1
DST.

H744-0-1 Z

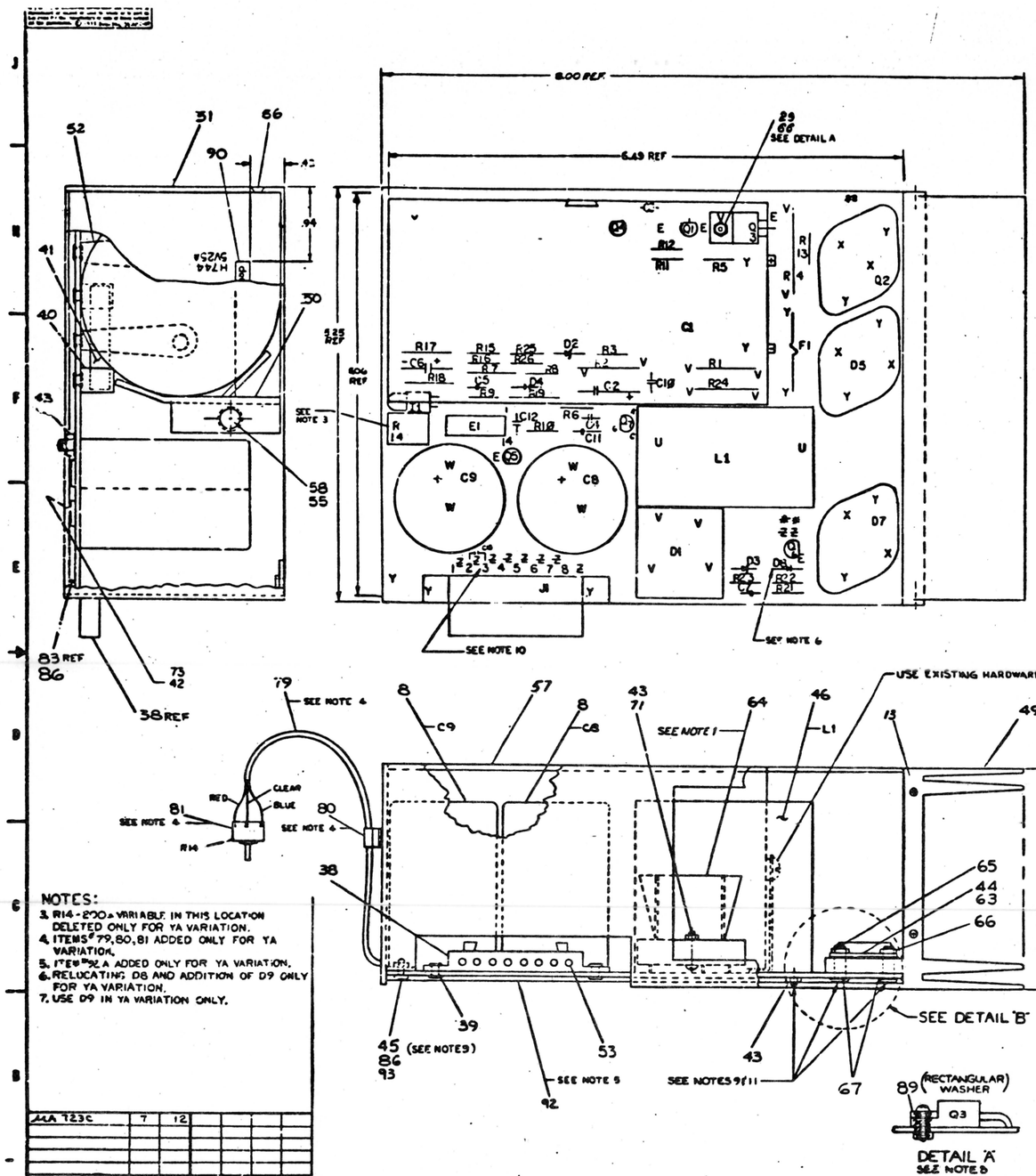

NOTES:

1. APPLY ITEM #63 (COMPOUND) BETWEEN TRANSISTOR (Q2), DIODES (D5, D7) AND ITEM #44 (WASHER) ALSO BETWEEN ITEM #44 (WASHER) AND HEAT SINK (ITEM #49). ALSO APPLY ITEM #63 (COMPOUND) BETWEEN ITEM #9 (DIODE BRIDGE) AND ITEM #64 (HEAT SINK BRIDGE).

NOTES CONT:

NOTE 8:
(1) Q3 SCREW HEAD SHOULD BE ON TOP OF FLAT RECTANGULAR WASHER AS SHOWN. APPLY 6 INCH LBS. OF TORQUE WHEN SECURING Q3 TO C.T. BOARD BEFORE SOLDERING.

NOTE 9: TORQUE APPLICATION
(1) APPLY 12 INCH LBS. OF TORQUE TO THE SCREWHEAD OF #4 HARDWARE EXCEPT Q3.
(2) APPLY 12 INCH LBS. OF TORQUE TO #6 HARDWARE ON L1.
(3) APPLY 16 INCH LBS. OF TORQUE TO ALL #6 AND #10 HARDWARE EXCEPT ON L1.
(4) ALL HARDWARE TO BE TORQUED BEFORE SOLDERING.

NOTE 10
INSERT G13 INTO ETCH PAD HOLES CONNECTED TO J1 TERMINALS, 2-3.

NOTE 11:
MIN TORQUE REQUIRED FOR QC INSPECTION:
8 INCH LBS. FOR #4 HARDWARE;
12 INCH LBS. FOR #6 AND #10 HARDWARE

*SEE NOTE 7

NOTES:
3. R14 - 200Δ VARIABLE IN THIS LOCATION DELETED ONLY FOR YA VARIATION.
4. ITEMS #79, 80, 81 ADDED ONLY FOR YA VARIATION.
5. ITEM #92 ADDED ONLY FOR YA VARIATION.
6. RELOCATING D8 AND ADDITION OF D9 ONLY FOR YA VARIATION.
7. USE D9 IN YA VARIATION ONLY.

DETAIL 'A'
SEE NOTE 8

DETAIL 'B'
SCALE: 2/1

CAUTION:
OFF SHEET PARTS LIST REF TO K-PL-H744-0-DBP

MA 723C	7	12				
IC TYPE	GND	+5V	ITEM NO.	WIRE	FROM PT	TO PT
IC PIN LOCATIONS			JUMPER LIST			

FIRST USED ON ASSY NO. D-UA-H742A-0-0		ETCH BOARD REV	H1	PARTS LIST
D664	1N3604			
1N4744				
REC NO.	EIA NO.	DEC NO.	EIA NO.	SEMICONDUCTOR CONVERSION CHART

EQUIPMENT CORPORATION
TITLE: +5V REGULATOR
SIZE: C | DWG NO: UA H744-0-0 | REV: AB
SCALE: 2/1 | SHEET 1 OF 1

UA H744-0-0 AB

AUTOMATED BY PRTLST.3P(44) — P A R T S L I S T — SHEET A1 OF A3

LINE	ITEM	DOCUMENT NUMBER	PART NUMBER	DESCRIPTION	QTY PER VARIATION 00	YA	REFERENCE DESIGNATOR
1	1		5009725-00	H744 H	1	1	
2	2		1002627-00	2.2MFD 20V 10% S.TANT	1	1	C6
3	3		1001610-00	.01 MFD 50V +80-20% Z5U CER	2	2	C10,C13
4	4		1001637-00	2700.0 MMF 100V 5%200PPM MICA	1	1	C11
5	5		1000050-00	.033 MFD 100V 80V 10% MYL	1	1	C2
6	6		1001774-00	.05 MFD 25V 10% YSU DISC	2	2	C4,C3
7	7		1010858-00	31,000 MFD 50V +75-10% AL EL	1	1	C1
8	8		1010704-00	6000 MFD 10V +75-10% AL EL	2	2	C8,C9
9	9		1110714-00	NSS3514 FWR@400 I=20A (TRW)	1	1	D1
10	10		1105648-00	1N 4744 VZ= 15.0 10% 1W	1	1	D2
11	11		1100114-00	D 664 @S\75PC8 PIV= 25V SP	2	-	D4,D8
			CONT		-	3	D4,D8,D9
12	12		1110715-00	NSR8117 PIV= 75 I=20A TO3 SM	1	1	D5
13	13		9009142-02	SCREW, PHILLIPS FLAT HEAD, SELF	4	4	
14	14		1109465-00	MCR 649P2SCR@ 50V I=20A TO41	1	1	D7
15	15		1110925-00	ITTZ429 VZ= 5.1 2% .40W M	1	0	D3
16	16		1300250-00	150.0 .25 W 5.0 % CC	2	-	R12,R10
			CONT		-	3	R12,R10,R18
17	17		1301317-00	10.0 .25 W 5.0 % CC	1	1	R5
18	18		1302927-00	3.90 K 1.0 W10.0 % CC	1	1	R1
19	19		1300358-00	820.0 1.0 W10.0 % CC	1	1	R2
20	20		1310876-00	.02 5.0 W 3.0 % WW	1	0	R4
21	21		1300479-00	10.0 K .25 W 5.0 % CC	2	2	R6,R15
22	22		1302465-00	19.0 K .25 W 5.0 % CC	1	1	R25
23	23		1302411-00	511.0 .25 W 1.0 % RN55D-F10	1	0	R18
24	24		1300365-00	1.0 K .25 W 5.0 % CC	2	2	R8,R16
25	25		1309412-00	18.20 K .25 W 1.0 % RN55D-F10	1	1	R7
26	26		1301522-00	27.0 .25 W 5.0 % CC	2	2	R9,R11
27	27		1302955-00	750.0 .25 W 1.0 % RN55D-F10	1	0	R17
28	29		1301420-00	*** THIS ITEM IS NOT USED ***	-	-	

REVISION HISTORY			BASIC PART NO: 8H744										
ENG	ECO NUMBER	REV	SECTION A OF A										
G.P	H744-ML021	AB	SECTION.VARIATION INDEX [A] 00,YA [B] [C] [D] [E] [F] [H] [J] [K] [L] [M] [N]	DRN: W.G. CHK'D: D. FONTAINE DES.ENG: G. POTTER RESP.ENG.: G. POTTER MFG.ENG.: A. HIRSCH ASSEMBLY NUMBER: E-UA-H744-0-0	DATE: 12-16-71 DATE: 12-19-71 DATE: 12-28-71 DATE: 12-28-71 DATE: 01-07-72 TOP DOCUMENT NUMBER: #8-DD-H744-0		D	I	G	I	T	A	L
						TITLE: PARTS LIST 5V REGULATOR								
						DOCUMENT NUMBER								
						SIZE: K	CODE: PL	NUMBER: H744-0-DBP				REV: AB		
						FILE NAME: ML04A8.PLS						EDIT #: 13		

"THIS DRAWING AND SPECIFICATIONS HEREIN, ARE THE PROPERTY OF DIGITAL EQUIPMENT CORPORATION AND SHALL NOT BE REPRODUCED OR COPIED OR USED IN WHOLE OR IN PART AS THE BASIS FOR THE MANUFACTURE OR SALE OF ITEMS WITHOUT WRITTEN PERMISSION.
COPYRIGHT (C) 1981. DIGITAL EQUIPMENT CORPORATION "

AUTOMATED BY PRTLST.3P(44) — PARTS LIST — SHEET A2 OF A3

LINE	ITEM	DOCUMENT NUMBER	PART NUMBER	DESCRIPTION	QTY PER VARIATION 00	YW	REFERENCE DESIGNATOR
29	29		9006011-01	SCREW,PAN,PHIL 4-40X 3/8 SS	1	1	
30	30		1300229-00	100.0 .25 W 5.0 % CC	1	1	R23
31	31		1309422-00	5.10 .25 W 5.0 % CC	1	1	R21
32	32		1310852-00	200.0 .50 W20.0 % POT	1	0	R14
33	33		1510196-00	2N 5302/HSNPN 200WC SI 60 40 M	1	1	Q2
34	34		1510706-00	XA 55 PNP 500MW SI 60 50 P	3	3	Q1,Q6,Q4
35	35		1510708-01	D 45H8CPNP 50WT SI 60 60 Y	1	1	Q3
36	36		1510705-00	XA 05 NPN 500MW SI 60 50 P	1	1	Q5
37	37		1910415-00	723 VOLT REG VAR 2/37V	1	1	E1
38	38		1209340-00	MATE-N-LOK 8POS COMM HSG,SKT	1	1	J1
39	39		9009000-00	EYELET,ROLL FLANGE .1210DX .156	6	6	
40	40		9007203-00	CLIP, FUSE, WITH STOP, SCREW MOU	2	2	
41	41		1213237-01	FUSE, RECTIFIER 15A, 65V	1	1	F1
42	42		9009669-01	SCREW,PAN,SLOT 10-32X 5/16 SS	4	4	
43	43		9008185-00	NUT,KEP 6-32X1/4 AF	3	3	
44	44		9006721-00	WASHER, SPECIAL INSULATING, #294	3	3	
45	45		9008301-01	SCREW,PAN,PHIL 4-40X 1/4 SS	2	2	
46	46		1610850-00	44. UA 25A #MMC4347	1	1	L1
47	47		1300171-00	10.0 1.0 W 5.0 % CC	1	1	R24
48	48		1000012-00	56.0 MMF 100V 5%200PPM MICA	2	2	C5,C12
49	49	D-PS-1210737-0-0		HEAT SINK REGULATOR	1	1	
50	50	C-IA-12388-0-0		HOLDER, CAPACITOR 2.5	1	1	
51	51	D-IA-5309756-0-9		BRACKET, REGULATOR	1	1	
52	52	C-MD-5309759-0-0		STRAP, CAPACITOR	2	2	
53	53		1209456-01	MATE-N-LOK SKT COMM PC MTG LOOSE	8	8	
54	54		9006009-02	*** THIS ITEM IS NOT USED ***	-	-	
55	55		9006633-00	WASHER,LOCK,INT,.2800D X .1451D	1	1	
56	56		9008020-02	SCREW,FLAT,PHIL, 6-32X 3/16	1	1	
57	57	C-MD-5309760-0-0		COVER	0	1	
58	58		9006020-01	SCREW,PAN,PHIL 6-32X 1/4 SS	1	1	
59	59		1510877-00	2N 6028 UJT 300MW R678	1	1	Q7
60	60		1300489-00	12.0 K .25 W 5.0 % CC	1	1	R3
61	61		1305322-00	7.50 K .25 W 1.0 % RN55D-F10	1	1	R19
62	62		1300391-00	1.50 K .25 W 5.0 % CC	1	1	R26
63	63		9008268-00	COMPOUND, THERMAL JOINT	A/R	A/R	
64	64		1210907-00	HT STNK BRIDGE RECT #695-1-G	1	1	
65	65		9008033-01	SCREW,PAN,PHIL 4-40X 9/16 SS	6	6	
66	66		9006557-00	NUT,KEP 4-40X 1/4 AF	7	7	
67	67		9006632-00	WASHER,LOCK,INT,.2600D X .1201D	8	8	
68	68		1209219-01	LAMP 6V@200MA,T1-3/4PINS#2319	1	0	I1
69	69		1301424-00	680.0 .25 W 5.0 % CC	1	1	R22
70	70	A-PI-3700074-0-0		PACKAGING INSTRUCTIONS	1	1	
71	71		9006025-01	SCREW,PAN,PHIL 6-32X 5/8 SS	1	1	
72	72		1209169-00	LAMP, 15V @ .040AMP MAX, .075 CP	0	1	I1
73	73		9006635-00	WASHER,LOCK,INT,.3100D X .2001D	4	4	
74	74		9009157-00	*** THIS ITEM IS NOT USED ***	-	-	
75	75		9107302-11	*** THIS ITEM IS NOT USED ***	-	-	
76	75		9107278-11	*** THIS ITEM IS NOT USED ***	-	-	

SIZE	CODE	DOCUMENT NUMBER	REV
K	PL	H744-0-DBP	AB

TITLE: 5V REGULATOR

SECTION A OF A

AUTOMATED BY PRTLST.3P(44) — PARTS LIST — SHEET A3 OF A3

LINE	ITEM	DOCUMENT NUMBER	PART NUMBER	DESCRIPTION	QTY PER VARIATION 00	QTY PER VARIATION YA	REFERENCE DESIGNATOR
77	77		1505555-00	*** THIS ITEM IS NOT USED ***	-	-	
78	78		9107252-09	*** THIS ITEM IS NOT USED ***	-	-	
79	79	SEE NOTE	1700014-00	CABLE,COAX, 3 COND.	0	1	
80	80		9007079-00	CLAMP, CABLE, SCREW MNT, 1/8"	0	1	
81	81		1309532-04	1.0 K 2.0 W 5.0 % POT	0	1	R14
82	82		1301425-00	300.0 .25 W 5.0 % CC	0	1	R17
83	83		7419952-00	COVER COMPONENT	0	1	
84	84		1310876-02	.06 5.0 W 3.0 % WW	0	1	R4
85	85		1109991-00	1N .754A VZ= 6.8 5% .40W	0	1	D3
86	86		9008848-00	WASHER, FIBER, W/ADH. BACK, 1/2	0	2	
87	87		1010274-00	.22 MFD 50V +80-20% Z5U CER	1	1	C7
88	88		1312496-00	10.0 .25 W 5.0 % FUSE	1	1	R13
89	89		9009769-00	WASHER, RECTANGULAR .405X.225X.0	1	1	
90	90	A-DC-7416945-1-0		DECAL (H744)	1	1	
91	91		1214074-00	STRAP,THERMAL	1	1	
92	92	D-CS-H744-0-1		CIRCUIT SCHEMATIC	-	REF	
93	93	B-MH-H744-0-6		MODULE ECO HISTORY	-	REF	
94	94	K-CO-H744-0-4		X-Y COORDINATE HOLE LOCATION	-	REF	
95	95	D-AH-H744-0-5		ASSY/DRILLING HOLE LAYOUT	-	REF	

96 NOTE: CUT CABLE TO LENGTH OF 12 IN.

DIGITAL	TITLE	SECTION	SIZE	CODE	DOCUMENT NUMBER	REV
	5V REGULATOR	A OF A	K	PL	H744-0-DBP	A2

digital EQUIPMENT CORPORATION

DRAWING DIRECTORY

"THIS DRAWING AND SPECIFICATIONS, HEREIN, ARE THE PROPERTY OF DIGITAL EQUIPMENT CORPORATION AND SHALL NOT BE REPRODUCED OR COPIED OR USED IN WHOLE OR IN PART AS ... S FOR THE MANUFACTURE OR SALE OF ITEMS WITHOUT WRITTEN PERMISSION. COPYRIGHT © ... DIGITAL EQUIPMENT CORPORATION"

CUSTOMER PRINT SET INDEX

THIS IS PRINT SET

SEQUENCE		SEQUENCE	
DRAWING DIRECTORY	B-DD-H745-0		
CIRCUIT SCHEMATIC	D-CS-H745-0-1	MFG. SET	
UNIT ASS'Y	E-UA-H745-0-0	TEST PROCEDURE	A-SP-11/45-TA-2
		MFG. SPEC.	A-SP-H745-0 B
		PACKAGING INSTRUCTION	A-PI-3700074-0-0

UNIT VARIATIONS

VAR	TITLE	PRINT SET H745-1
H745	-15V REGULATOR	X

REVISIONS		
DATE	CHG. NO.	REV
	H745-16	K
	H745-17	L
	H745-18	M
9-76	H745-19	N
10-76	H745-20	P
7-77	H745-22	R
10-78	H745-NL222	S

USED ON OPTION/MODEL		DRN.	DATE	TITLE
11/45		CHKD.	DATE	-15V REGULATOR
		PROJ ENG.	DATE	
		PROD.	DATE	SIZE B / CODE DD / NUMBER H745-0 / REV S
SHEET 1 OF 2		FIELD SERV.	DATE	DIST

DRB 106

FIND NO.	DRAWING NO.	DESCRIPTION	TYPE
1	2-UA-H745-0-0	UNIT ASSY	E/M
	D-CS-H745-0-1	CIRCUIT SCHEMATIC	E
	D-AH-H745-0-5	ASSY/DRILLING HOLE LAYOUT	E
	B-MH-H745-0-6	MODULE ECO HISTORY	E
	A-SP-H745-0-8	MFG SPEC	E
	A-SP-11/45-TA-2	TEST PROCEDURE	E
	D-PS-1210737-0-0	HEAT SINK	M
	D-IA-5309756-0-0	REGULATOR BRACKET	M
	C-IA-5309761-0-0	2-5 CAP BRACKET	M
	C-MD-5309759-0-0	CAPACITOR STRAP	M
2	A-PI-3700074-0-0	PACKAGING INSTRUCTIONS	M
	A-PS-9905211-0-0	OUTER CARTON	M
	A-PS-9905212-0-0	INNER PACKAGE	M

FIND NO.	DRAWING NO.	DESCRIPTION	TYPE

TYPE: E ELECTRICAL
M MECHANICAL
E/M ELECTRO/MECHANICAL

digital

TITLE -15V REGULATOR

SHEET 2 OF 2 | SIZE B | CODE DD | NUMBER H745-0 | REV S

DRB 108A

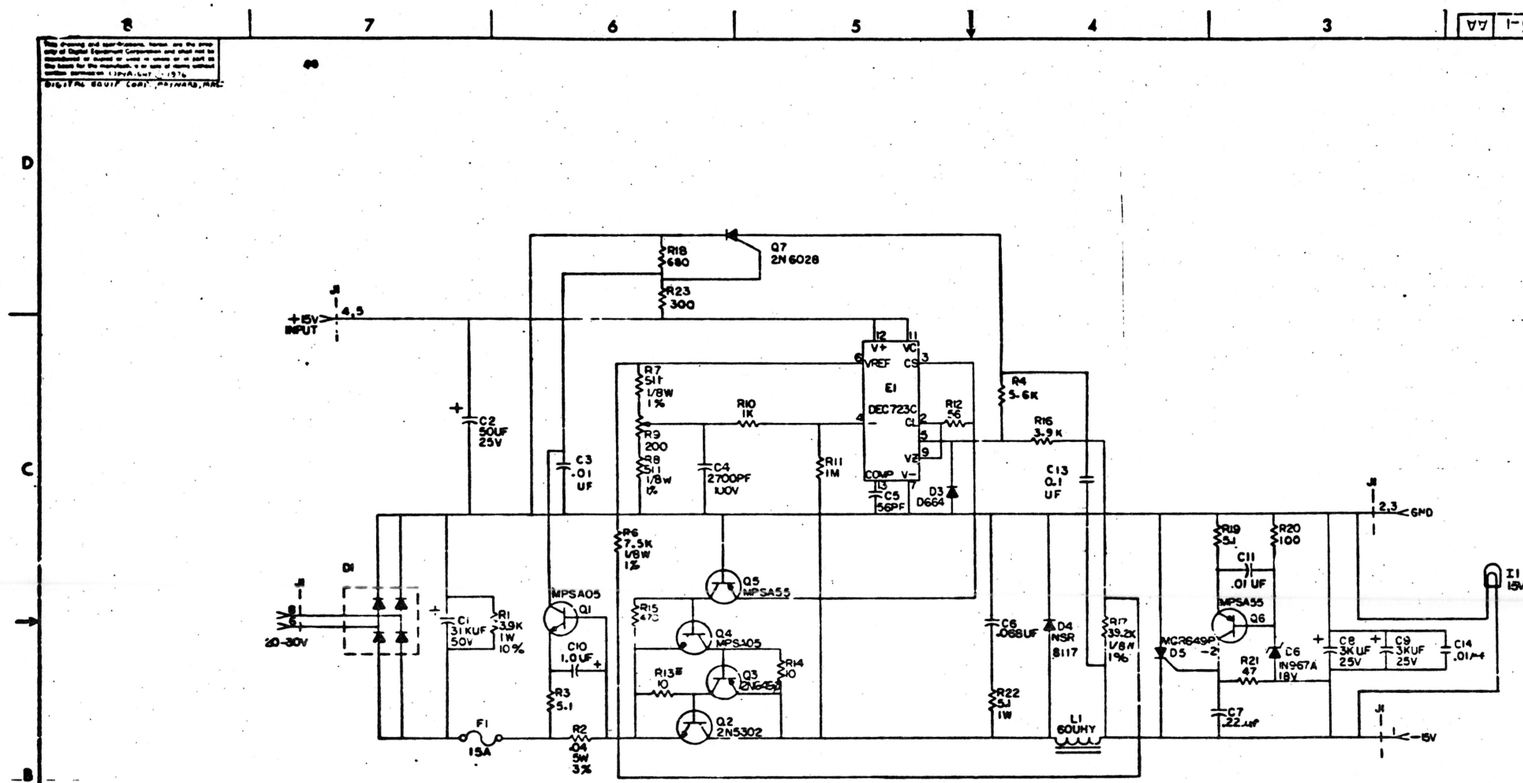

① FUSIBLE

UNLESS OTHERWISE INDICATED:

RESISTORS = 1/4W, 5%

QTY	REF DESIGNATION	DESCRIPTION	PART NO.	ITEM NO.
		PARTS LIST		
		ETCH BOARD REV		
		D45H8	D664	
		2N 6028	NSR 8117	
			MCR 649P-2	
		SAME	1N 967A	
			2N 5302	
			MPS A05	
			MPS A55	

SEMICONDUCTOR CONVERSION CHART

DEC NO.	EIA NO.	DEC NO.	EIA NO.
D664	1N 3606	D45H8	
NSR 8117		2N 6028	
MCR 649P-2			
1N 967A	SAME		
2N 5302			
MPS A05			
MPS A55			

REVISIONS	REV	CHANGE NO.	CHK
H745-00021	B	H745-00021	A. BARON
H745-00021	A	H745-00021	A. BARON

DRN. Roger J. Lamoureux DATE 11-4-71
CHK'D. Angel Nieves DATE 11-9-71
ENG. [illegible] DATE 11/72
PROJ. [illegible] DATE 1/1/72
PROD. [illegible] DATE 1/13/72
NEXT HIGHER ASSY

DIGITAL EQUIPMENT CORPORATION
MAYNARD MASSACHUSETTS

TITLE: -15V REG

SIZE D | CODE CS | NUMBER H745-0-1 | REV AA

SCALE

SHEET 1 OF 1

DIST.

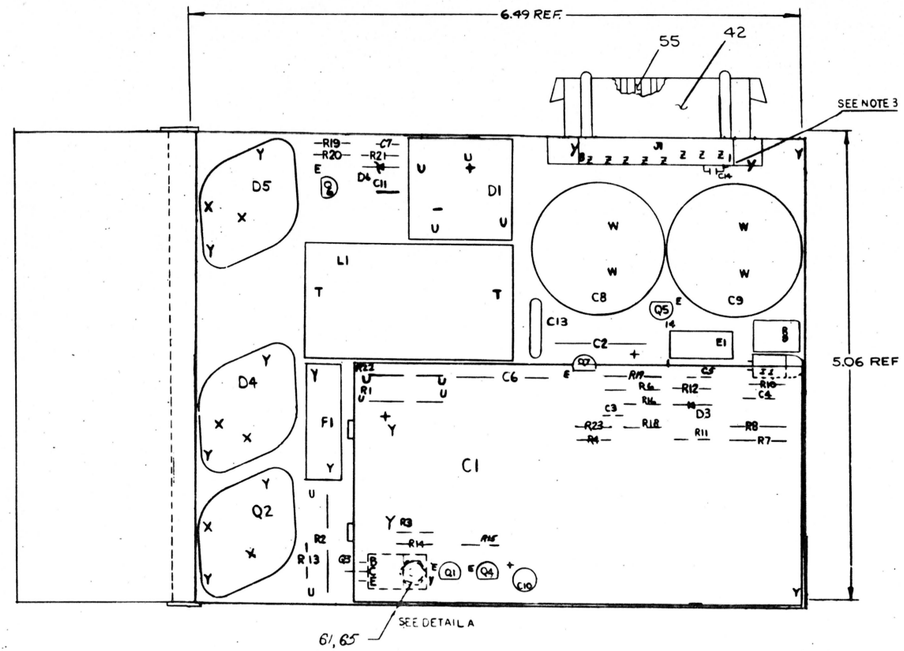

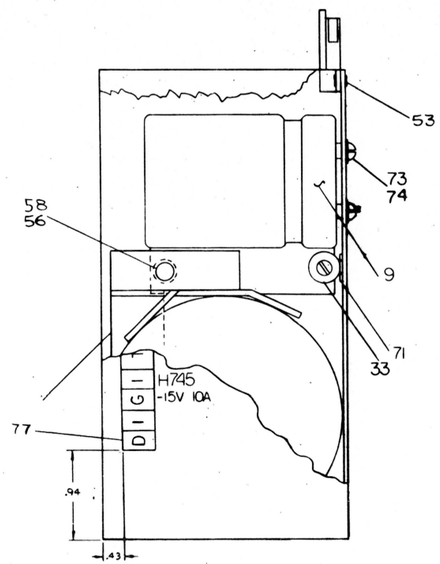

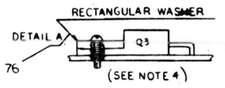

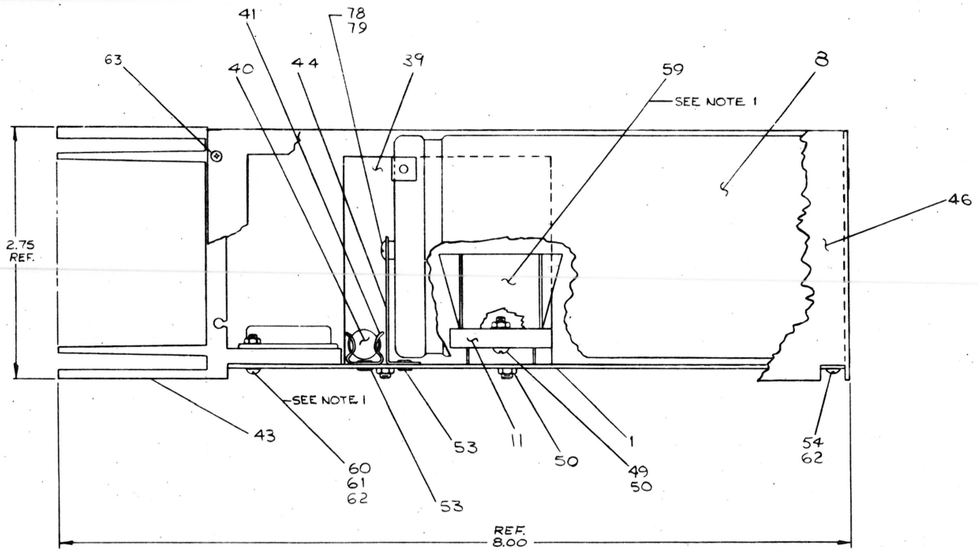

NOTE:
3. INSERT C14 INTO ETCH PAD HOLES CONNECTED TO J1 TERMINALS 1-2.

NOTE 4:
Q3 SCREW HEAD SHOULD BE ON TOP OF FLAT RECTANGULAR WASHER AS SHOWN, APPLY 6 INCH LBS. OF TORQUE WHEN SECURING Q3 TO CKT. BOARD BEFORE SOLDERING.

NOTE 5: TORQUE APPLICATION
(1) APPLY 8 INCH LBS. OF TORQUE TO ALL #4 HARDWARE EXCEPT Q3.
(2) APPLY 12 INCH LBS. OF TORQUE TO ALL #6 HARDWARE 16 IN LBS TO #10 HARDWARE
(3) ALL HARDWARE TO BE TORQUED BEFORE SOLDERING.

NOTE:
1. APPLY ITEM #51 (THERMAL COMPOUND) BETWEEN TRANSISTOR AND INSULATOR, WASHER (ITEM #82 ALSO BETWEEN WASHER & HEAT SINK FOR Q2, Q4 & Q5 ALSO APPLY ITEM #51 (COMPOUND) BETWEEN ITEM #11 (DIODE BRIDGE AND ITEM #59 (HEAT SINK).
2. 1010621 MAY BE SUBSTITUTED FOR C13 (1000030).

QTY.	REF DESIGNATION	DESCRIPTION	PART NO.	
		ASSY/DRILLING HOLE LAYOUT	D-AM-H745-0-S	70
1		PACKING INSTRUCTIONS	API-370807A-0-0	69
1	R18	RES. 680 1/4W 5%	1301424	68
1	R23	RES. 300 1/4W 5%	1301423	67
1	C13 (SEE NOTE 2)	CAP. 0.1 UF 100V 20%	1000030	66
1		SCR PH 8-32 X 5/16 LG	9008010-1	65
1	J1	LAMP 15V	1214356	64
4		SCR, PPH #4 X 5/16 LG, SELF TAPPING	9008448	63
8		L WASHER #4	9008632	62
7		NUT KEPS #4-40	9008057	61
6		SCR PHL PAN HD #4-40 X 9/16 LG	9008033-1	60
1		HEAT SINK BRIDGE RECT.	1210807	59
1		SCR PHL PAN HD #6-32 X 1/4 LG	9008028-1	58
1		SCR PHL FLT HD #6-32 X 1/4 LG	9006020-02	57
1		WASHER LOCK #8	9006633	56
8		CONTACT FEMALE	1288408	55
2		SCR PHL PAN HD#4-40 X 1/4 LG	9008301-1	54
6		EYELET GS-4-5	9009000	53
3		INSULATOR, WASHER	9008721	52
A/R		THERMAL COMPOUND	9008280	51
3		NUT KEPS 6-32	9008185	50
1		SCREW PHL PAN HD 8-32 X 5/8 LG	9006025-01	49
4		SCREW PHL PAN HD #6-32 X 1/4 LG	9006020-0	48
1		CONVERSION KIT	C-AM-5308705-0-0	47
1		ABSULATOR BRKT	D-IA-5308756-0-9	46
1		2.5 HOLDER CAPACITOR	C-IA-7412388-0-0	45
2		STRAP CAPACITOR	C-MD-5308730-0-0	44
1		HEAT SINK	D-PS-1210737-0-0	43
1	J1	CONN MATE-N-LOCK 8 PIN	1300340	42
2		FUSE CLIP	9007203	41
1	F1	FUSE	1213237-01	40
1	L1	REACTOR 60 UHY	1610850	39
1	E1	INTEGRATED CIRCUIT UA723C	1910415	38
1	Q3	TRANSISTOR 2N6498	1512652-01	37
2	Q5 Q6	TRANSISTOR A05	1510705	36
2	Q1 Q4	TRANSISTOR A05	1510705	35
1	Q2	TRANSISTOR 2N5302	1510705	34
1	R9	RES VARIABLE 200 Ω 20%	1310852	33
1	R20	RES 100 Ω 1/8 5%	1300229	32
1	R11	RES 1 MEG 1/8 5%	1309595	31
1	R4	RES. 5.6 K 1/4 W 5%	1301874	30
1	R16,	RES 3.8K 1/8 5%	1309444	29
2	R19, R3	RES 5.1 1/8 5%	1309422	28
1	R12	RES 56 1/8 5%	1302802	27
1	R21	RES 47 1/8 5%	1302282	26
1	R17	RES 39K 2K 1/8W 1%	1305264-5	25
1	R10	RES 1K 1/8 5%	1300265	24
1	R14	RES 10 1/8 5%	1301317	23
1	R6	RES 7.5K 1/8W 1%	1305322	22
2	R7 R8	RES 511 1/8W 1%	1302411	21
1	R22	RES 5.1 1/8 5%	1302135	20
1	R24	RES 10K 1/8 5%	1300275	19
1	R2	RES .06Ω 5W 3%	1311362-00	18
1	R1	RES 3.8K 1/8 10%	1302927	17
1	D8	DIODE 1N967	1110088	16
1	D5	SCR MCR648P-2	1108405	15
1	D4	DIODE MSR8117	1118715	14
1	D3	DIODE D64	1108114	13
1	Q7	TRANSISTOR UNI JUNCTION 2N6028	1510877	12
1	D1	DIODE BRIDGE	1110714	11
1	C12	CAP .47UF 200 10%	1054212	10
2	C8, C9	CAP 3.0K UF 25V	1017103	9
1	C1	CAP 31K UF 50V	1018938	8
1	C10	CAP 1.0 UF 25V	1010966-01	7
1	C2	CAP 50 UF 25V -10+75%	1001206	6
1	C6	CAP .068 UF 100V 10%	1000802	5
1	C4	CAP 2700PF 100V 5%	1001637	4
3	C11, C3, C14	CAP .01UF 100V 20%	1001810	3
1	C5	CAP .33UF 100V 5%	1001812	2
1		ETCHED CIRCUIT BOARD	9007754	1
		CIRCUIT SCHEMATIC	D-AM-H745-0-S	
		PARTS LIST		

1	R15	RES 470 1/4W 5%	1300316	81
1		DECAL (H745)	7416945-02	80
2		WASHER INT. TOOTH #10	9006635	79
2		SCREW PAN 10-32 x 5/16 LG	9009669-01	78
1	C7	CAP .22 uF 50V	1010274	77
1		WASHER, RECTANGULAR	9009759	76
1	R13	RES 10Ω 1/4W, FUSIBLE	1312496-00	75
4		LOCKWASHER #10 INT	9006635	74
4		SCR #10-32 X 31 SLOTTED PIN HD.	9009669-01	73
1		TRANSIPAD	9008206	72
1		ETCH BOARD REV E		71

IC TYPE	GND	+5V
GND AND 5V ARE USUALLY PIN 7 AND 14 RESPECTIVELY EXCEPTIONS ARE STATED ABOVE		
IC PIN LOCATIONS		

ITEM NO	WIRE	FROM PT	TO PT
JUMPER LIST			

D664 IN3606

SEMICONDUCTOR CONVERSION CHART

EQUIPMENT CORPORATION

TITLE: -15 REGULATOR

E UA H745-0-0 AB

SIZE

SHEET

AB

H745-0-0

digital EQUIPMENT CORPORATION MAYNARD MASSACHUSETTS

DRAWING DIRECTORY

"THIS DRAWING AND SPECIFICATIONS, HEREIN, ARE THE PROPERTY OF DIGITAL EQUIPMENT CORPORATION AND SHALL NOT BE REPRODUCED OR COPIED OR USED IN WHOLE OR IN PART AS THE BASIS FOR THE MANUFACTURE OR SALE OF ITEMS WITHOUT WRITTEN PERMISSION. COPYRIGHT © 1974, DIGITAL EQUIPMENT CORPORATION"

CUSTOMER PRINT SET INDEX

THIS IS PRINT SET ☐☐☐☐

SEQUENCE		SEQUENCE	
DRAWING DIRECTORY	B-DD-H754-Ø		
+20 VOLT REGULATOR	E-CS-H754-0-1		

UNIT VARIATIONS		PRINT SET
VAR	TITLE	1
H754-0	+20 VOLT REGULATOR	X

REVISIONS	DATE	CHG. NO.	REV
	10-75	H754-9	A
	11-3	H754-10	B

DEC 16-13231-1062-1A-R972

DRB 106

USED ON OPTION/MODEL		DRN.	DATE
		J.Fleming	2/21/74
		CHK'D.	DATE
		J.Fleming	2/21/74
		PROJ ENG.	DATE
		E. A. Stone	3-13-74
		PROD.	DATE
		Jack Downar	3-14-74
		FIELD SERV.	DATE
SHEET 1 OF 3		Walt Aubee	7/25/74

TITLE: +20 VOLT REGULATOR

SIZE	CODE	NUMBER	REV
B	DD	H754-Ø	B

DIST

ELECTRICAL

CUSTOMER PRINT SET 1	MFG. SET	FIND NO.	DRAWING NO.	REV	NO OF SHT	DESCRIPTION	OPTION NO./FILE DATE
X		1	B-DD-H754-Ø	#	3	DRAWING DIRECTORY	
X			E-CS-H754-Ø-1	#	2	+20 VOLT REGULATOR	
			K-CO-H754-Ø-4		-	X-Y COORDINATE HOLE LOCATION	
			D-AH-H754-Ø-5		1	ASSY/DRILLING HOLE LAYOUT	
			B-MH-H754-Ø-6		1	MODULE ECO HISTORY	
			5010531		-	ETCHED CIRCUIT BOARD	
			A-SP-H754-Ø-8		3	MANUFACTURING SPEC	

MECHANICAL

CUSTOMER PRINT SET 1	MFG SET	FIND NO.	DRAWING NO.	REV	NO OF SHT	DESCRIPTION	OPTION NO./FILE DATE
X		1	E-CS-H754-0-1	#	2	+20 VOLT REGULATOR	
			D-PS-1210737-0-0		1	HEAT SINK REGULATOR	
			C-IA-5309758-0-0		1	CAPACITOR BRACKET	
		2	D-IA-5409756-0-0		1	BRACKET REGULATOR	
			A-SS-5309756-0-1		1	SILK SCREEN	
			A-SS-5309756-0-2		1	SILK SCREEN	
			A-SS-5309756-0-3		1	SILK SCREEN	

CUSTOMER PRINT SET CODES	
	X = PRINT OF DOCUMENT INCLUDED IN PRINT SET
	C = INCLUDES ALL PRINTS INDICATED ON DOCUMENT
	S = CONFIDENTIAL AUTHORIZED SIGNATURE REQUIRED

TITLE		SIZE	CODE	NUMBER	REV
+20 VOLT REGULATOR	SHEET 2 OF 3	B	DD	H754-Ø	B

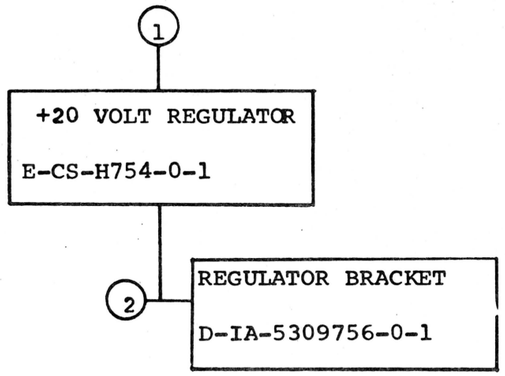

TITLE		SIZE	CODE	NUMBER	REV
+20 VOLT REGULATOR	SHEET 3 OF 3	B	DD	H754-Ø	B

COPYRIGHT © 1972 DIGITAL EQUIPMENT CORPORATION

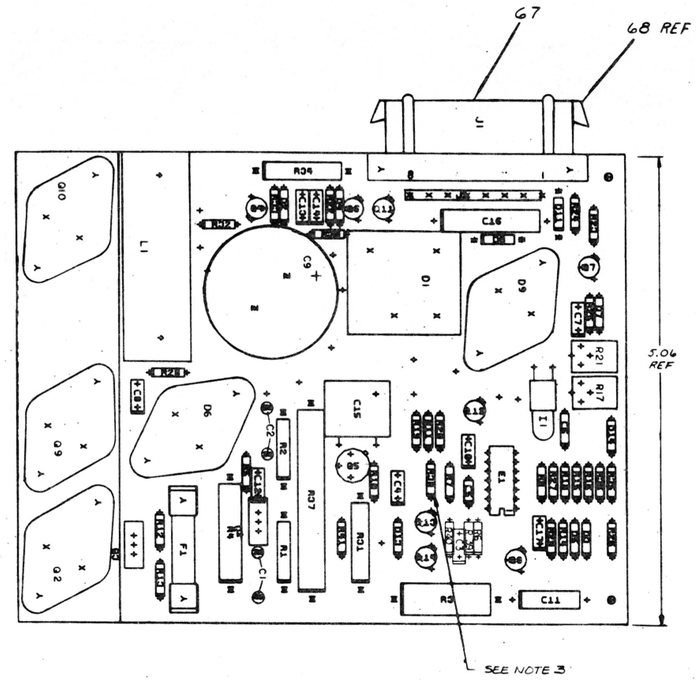

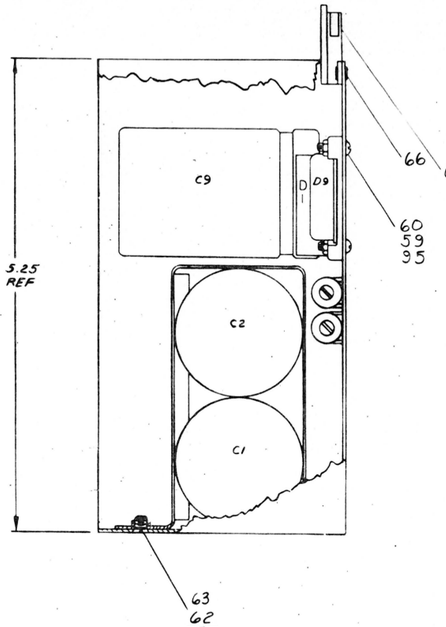

5. APPLY 8 INCH LBS OF TORQUE TO ALL #4 HARDWARE USED TO SECURE TRANSISTORS TO CIRCUIT BOARD. APPLY 16 INCH LBS OF TORQUE TO ALL #10 HARDWARE.

NOTES:

1. APPLY ITEM #71 (COMPOUND) ON BOTH SIDES OF ITEM #72 (INSULATOR WASHER) FOR Q2, Q9, Q10. ALSO APPLY BETWEEN ITEM #11 (DIODE BRIDGE D1), AND ITEM #65 (HEAT SINK, BRIDGE RECT.)
2. UNLESS OTHERWISE INDICATED:
   RESISTORS ARE 1/4 W, 5%.
   CAPACITORS ARE 100V, ±5%.
3. ADD INSULATION (9107256-11) TO BOTH LEADS OF R38 TO AVOID SHORT TO ETCH.
4. APPLY ITEM #71 (COMPOUND) ON BOTH SIDES OF ITEM #94 (MICA WASHER) FOR D6.

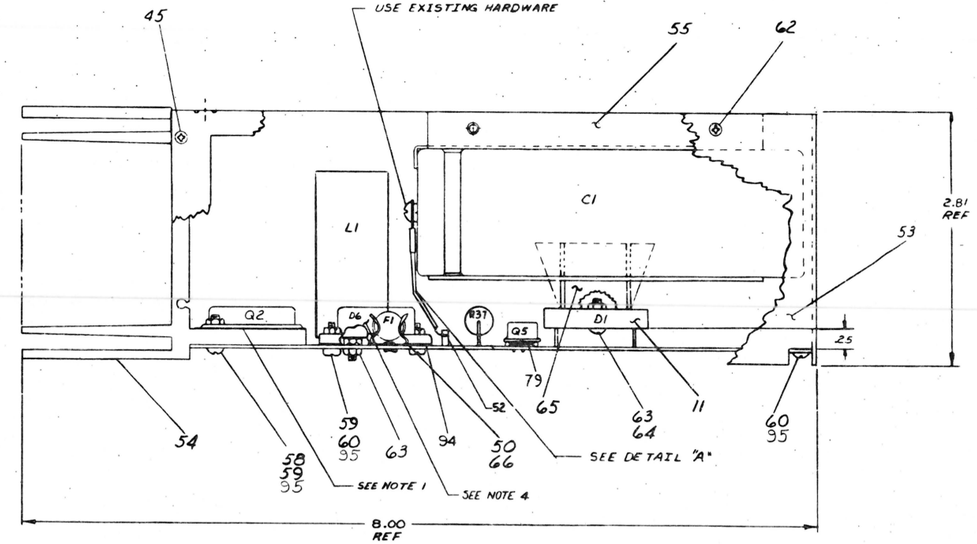

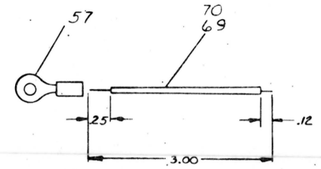

DETAIL "A"
SCALE: NONE
RED WIRE GOES TO POSITIVE TERMINAL
BLK WIRE GOES TO NEGATIVE TERMINAL

DELETED COMPONENTS	
RESISTORS	R9
DIODES	D10, D12

ITEM NO.	QTY	REF DESIGNATION	DESCRIPTION	PART NO.
95	2		WASHER #4 INT TOOTH	9006632
94	1		WASHER, MICA	9009063
93	1	CT	CAP .22 uF 50V	1010174
92	1	Q1	TRANSISTOR 2N4920-1	1509605-1
91	A/R	R13	RES.27Ω 1/4W 5% FUSIBLE	1312496-01
90	1		INSULATION	9107256-11
89	1	R39	RES 330 1/4W 5%	1300271
88	1	R37	RES 1.1 10W 1%	1309108-1
87	1	R38	RES 8 W THERMISTOR	1310071
86	1	C16	CAP. 100uF 25V	1002781
85	1	Q10	TRANSISTOR MJ800	1510712
84	1	Q9	TRANSISTOR MJ3000	1511349
83	1	C13	CAP. 100 PF, 300V ±2% DM	1000016
82				
81	2	Q4, Q14	TRANSISTOR MPS A05	1510705
80	1	D2	DIODE D003	1100100
79	2	(UNDER Q5 + R2)	TRANSIPAD	9007288
78	1	R31	RES .13Ω 2W 10%	1310147
77	2	C14, C17	CAP. 1000 PF 100V, 2½% DM	1000042
76	1	R22	RES 383Ω 1/8W 1%	1302723
75	2	R33, R8	RES 1.78K 1/8W 1%	1302612
74	1	R11	RES 15K 1/4W 5%	1300496
73	1	R20	RES 470Ω 1/4W 5%	1300316
72			WASHER INSULATOR	9006781
71	A/R		COMPOUND, THERMAL	9009248
70	A/R		WIRE, HOOKUP, STRD, 1 PR, INS (BLK)	8107380-00
69	A/R		WIRE, HOOKUP, STRD, 1 PR, INS (RED)	8107380-22
68	1	J1	WIRE-O-LOCK CONN 8 PIN	1200340
67	8		PIN, SOCKET, MATE-N-LOCK	1200408
66	4		SCREW, 6-32 x 1	9000132
65	1		HEAT SINK, BRIDGE RECTIFIER	1210007
64	1		SCR. PHL PAN HD 8-32 ½	9000024-1
63	5		NUTS NUT 6-32 SS	9000185
62	2		SCR PHL FLAT HD 8-32 x 5/16	9000021-2
61	2		SCR PHL PAN HD 6-32 x 3/8	9000009-3
60	6		SCR PHL PAN HD 4-40 x 3/8	9000011-1
59	10		NUTS NUT 4-40	9000052
58	6		SCR PHL PAN HD 4-40 x ¼	9000013-1
57	4		TERMINAL SOLDERLESS, #10	9007830
56	1		C-1A-5309758-0-0	
55	1		1.5 CAP BANK	C-1A-5309758-0-0
54	1		HEAT SINK REGULATOR	D-PS-1210737-0-0
53	1		BRACKET REG	D-1A-5309756-4-0
52	4		SPLIT LUG	9007135
51	1	Q8	TRANSISTOR 2N6029	19-10877
50	2		FUSE CLIP	9007203
49	1	F1	FUSE 1¼ AMP	1213237-00
48	1	L1	REACTOR 1.7 MHY	19-10949
47	1	E1	INTEGRATED CIRCUIT 723	19-10415
46	6	Q7,Q6,Q11,Q12, Q13	TRANSISTOR MPS A55	19-10708
45	4		SCR PHL FLAT HD #6-40 SELF TAPPING	9008142-07
44	1	Q5	TRANSISTOR 2N3700	19-03709
43	1	Q2	TRANSISTOR 2N5039	19-10869
42	1	Q3	TRANSISTOR 2N6491	19-13704
41	2	R17, R21	RES VARIABLE 200Ω ±20% POT	13-10852
40	2	R23, R36	RES 5.1 W 5%	13-09422
39	1	R18	RES.237 1/8W 1%	1304857
38				
37	2	R14, R5	RES W 5% 27	13-01522
36	1	R10	RES 150 W 5%	13-00250
35	REF		ASSY/DRILLING HOLE LAYOUT	D-AH-H754-0-0
34	2	R7, R40	RES 2K 1/4W 5%	1302308
33	2	R6, R19	RES 120 W 5%	13-00480
32	6	R15, R25, R30, R24, R35, R41	RES 100 W 5%	13-00226
31	1	R12	RES 68Ω 1/4W 5% FUSIBLE	1312496-02
30				
29	1	R27	RES 10K 1/2W 1%	1303372
28	1	R32	RES 39K 1/4W 5%	13-00444
27	1	R16	RES 287Ω 1/8W 1%	13-05124
26	1	R29	RES 100 W 5%	13-00485
25	1	C11	CAP 2.2 UF 35V 10% S. TANT	10-02431
24	1	R4	RES W 5% .03Ω	1310876-1
23	1	R3	RES 1.5K 5W 5%	13-01897
22	1	R34	RES 47 2W 5%	13-05258
21	1	R28	RES 1.5K W 5%	13-00391
20	2	R1, R2	RES 3.3K W 10%	13-02827
19	1	R20	RES 10Ω 1/4W, 5%	1301317
18	2	D11, D8	DIODE IN5624	1110420
17				
16	1	D16	DIODE 752A ZENER	1102808
15	1	D8	DIODE MDR 840 P.2	11-09485
14	1	D7	DIODE IN3788, 24 V	11-10856
13	1	D6	DIODE, 20 AMP FAST REC	11-10715
12	1	D3	DIODE IN4744 ZENER, 15V	11-09648
11	1	D1	DIODE MSS 3514	11-10714
10	3	D5, D13 D4	DIODE 1N914	11-00114
9	1	C15	CAP .1UF 100V 20% DISC	1000030
8	1	C9	CAP 2.2K UF 30V ±2% AL EL	10-10950
7	4	C3, C8, C4, C18,	CAP .01UF 50V 20% DISC.	10-01810-01
6	1	C6	CAP 270PF 100V 5% DM	10-01637
5	1	C5	CAP 39PF 100V 5% DM	10-00012
4	1	J1	LAMP, 28V, 40 MA	12-11239
3	1	C12	CAP 68UF 25V DISC	10-01774
2	4	C1, C2	CAP 5.8K UF 30V ±2% AL EL.	10-11863
1	1		ETCHED CIRCUIT BOARD	50-10531
REF	1		MODULE ECO HISTORY	B-MM-H754-0-6
REF	1		X-Y COORDINATE HOLE LOCATION	K-00-H754-0-4

PARTS LIST

ETCH BOARD REV J

D664	JN3606

IC TYPE	GND	+5V

GND AND 5V ARE USUALLY PIN 7 AND 14 RESPECTIVELY. EXCEPTIONS ARE STATED ABOVE

IC PIN LOCATIONS

ITEM NO.	AWG	FROM PT	TO PT

JUMPER LIST

REV	REVISIONS	DEC NO.	ECA NO.	DEC NO.	ECA NO.
J	H754-00001				
K	H754-00002				
L	H754-00003				
M	H754-00004				
N	H754-00005				
P	H754-00006				
R	H754-00007				
S	H754-00008				
T	H754-00009				
U	H754-00010				
V	H754-00011				

SEMICONDUCTOR CONVERSION CHART

DRAWN 5-12
CHECKED 5-12
PROJ. ENGR. 5-12
MGR. ENGR. 5-12
QUALITY 5-12
PROD. CONTROL 5-12

DIGITAL EQUIPMENT CORPORATION
MAYNARD, MASSACHUSETTS

TITLE
+ 20 VOLT REGULATOR

SIZE B | CS H754-0-1 | REV V

SCALE 1 | SHEET 1 OF 2

"THIS DRAWING AND SPECIFICATIONS, HEREIN, ARE THE PROPERTY OF DIGITAL EQUIPMENT CORPORATION AND SHALL NOT BE REPRODUCED OR COPIED OR USED IN WHOLE OR IN PART AS THE BASIS FOR THE MANUFACTURE OR SALE OF ITEMS WITHOUT WRITTEN PERMISSION.
COPYRIGHT © 1972, DIGITAL EQUIPMENT CORPORATION"

F1 10A
D1 NSS 3514
C1 5800UF 50V
C2 5800UF 50V
R1 3.9K 1W 10%
R2 3.9K 1W 10%
J1-8 AC
J1-7
R4 .03Ω 5W, 3%
R5 27Ω
R3 1.5K 5W, 5%
C12 .05UF 25V
Q1 2N4920-1
Q2 2N5038
Q3 2N6491
R13 * 27Ω
R12 * 68Ω
L1 170 UHY
R28 10Ω
C8 .01UF 20% 50V
D6 20AMP
D11 1N5624
R23 5.1Ω
R24 100Ω
C16 1000UF 25V
J1-5 +20V
I1
Q7 MPSA55
C9 2200UF 30V
D13 D664
Q5 DEC 3500
Q4 MPS A05
R37 .1 10W 1%
D9 MCR 649P-2
C7 .22UF 50V
R25 100Ω
C3 .01UF
R39 220Ω
R40 2K
Q13 MPS A55
C11 2.2UF 35V 10%
D3 1N4744 15V
R6 12K
1000PF 100V C17
R29 18K
Q8 2N6028
R7 2K
R38 1K THERM.
R10 150Ω
C4 .01UF 50V 20%
C15 .1UF 20%
R41 100Ω
R11 15K
R20 470Ω
Q12 MPSA55
D14 752A
R36 5.1Ω
R35 100Ω
D8 1N5624
D7 1N970B 24V
J1-3 -5V
J1-2 GND
R33 1.78K 1/8W 1%
R34 .47Ω 2W 5%
Q11 MPS A55
C13 100PF
Q10 MJ9000
R32 3.9K
MPS A05 Q4
D2 D003
R31 .15Ω 2W 10%
D4 D664
MPS A55 Q6
C14 1000PF
Q9 MJ3000
R30 100Ω
R22 383Ω 1/8W 1%
R21 200Ω 20% 1/2W
R26 1.5K
D5 D664
R8 1.78KΩ 1/8W, 1%
R27 10K 1/8W, 1%
R14 27Ω
R19 12K
C10 .01UF 20% 50V
C6 2700 PF
R15 100Ω
R16 287Ω 1/8W 1%
R18 237Ω 1/8W 1%
R17 200Ω 20% 1/2W
12 VCC
11 VC
4 INV
5 NON INV
9 VZ
723 EI
2 CL
3 CS
6 VREF
COMP GND
13
7
DEC 723C
C5 56PF

* FUSIBLE RESISTOR

DRN N. BISSONNETTE	8-29-72	FIRST USED ON H754	digital
CHK'D R. VOWLES	12-17-72	TITLE +20 VOLT REGULATOR	
ENG. R. BURTON	5-7-73		
PROJ. ENG. R. BURTON	5-7-73		
PROD. L. BAPTISTE	5-9-73		
NEXT HIGHER ASSY.		SIZE D CODE CS NUMBER H754-0-1 REV. V	
SCALE			
SHEET 2 OF 2		DIST.	

"THIS DRAWING AND SPECIFICATIONS, HEREIN, ARE THE PROPERTY OF DIGITAL EQUIPMENT CORPORATION AND SHALL NOT BE REPRODUCED OR COPIED OR USED IN WHOLE OR IN PART AS THE BASIS FOR THE MANUFACTURE OR SALE OF ITEMS WITHOUT WRITTEN PERMISSION.
COPYRIGHT © 1974 DIGITAL EQUIPMENT CORPORATION"

NOTES:

1. FOR HAND WIRING INFORMATION SEE WIRE TABLE ON SHEET 3.
2. MATE-N-LOK FIXTURES (ITEM 28) MUST BE USED DURING WAVE SOLDERING OF J2, J3-J12
3. WIRE JUMPERS ON CIRCUIT BOARD ARE PART OF SIGNAL PATHS. THEY ARE NOT FOR OPTIONS
4. PLACE DECALS (ITEM 30, 31 & 36) APPROX. AS SHOWN.
5. POWER DIST. BOARD WITH 7 & 14 AWG WIRES AND BUS BAR IS THE YA VARIATION.
6. PLACE DECAL (ITEM 34) COVERING BOARD ETCH APPROX. AS SHOWN.

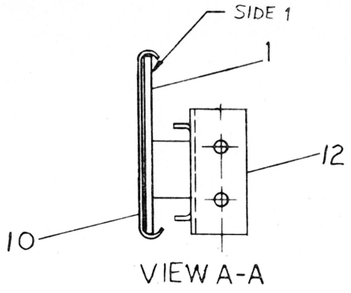

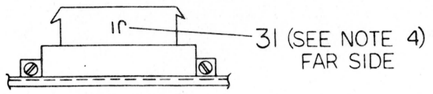

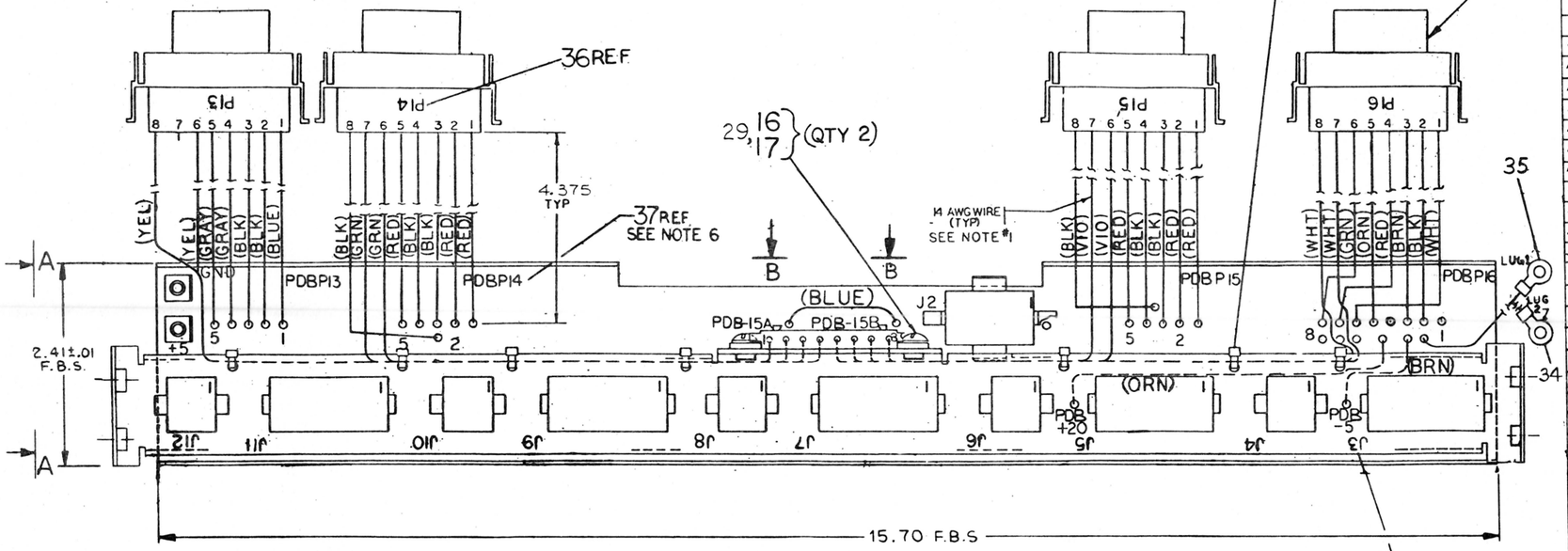

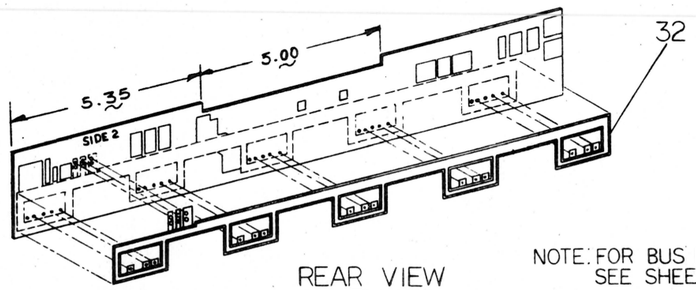

REAR VIEW
SCALE: NONE

NOTE: FOR BUS BAR CONNECTIONS SEE SHEET 3 OF 3

IC TYPE	GND	+5V
GND AND 5V ARE USUALLY PIN 7 AND 14 RESPECTIVELY EXCEPTIONS ARE STATED ABOVE		
IC PIN LOCATIONS		

QTY 5410864-YA	QTY 5410864	REF. DESIGNATION	DESCRIPTION	PART NO.	ITEM NO.
1	1		ETCHED CIRCUIT BOARD	D-IA-5010863-0-0	1
5	5	J4, J6, J8, J10, J12	CONN, 6 PIN MATE-N-LOK (FEMALE)	1209350-06	2
1	1	J1	CONN, 8 PIN MATE-N-LOK (FEMALE)	1209340-00	3
5	5	J3, J5, J7, J9, J11	CONN, 15 PIN MATE-N-LOK (FEMALE)	1209350-15	4
1	1	J2	CONN, 12 PIN MATE-N-LOK (FEMALE)	1209350-12	5
4	4	P13 THRU P16	CONN, 8 PIN MATE-N-LOK (MALE)	1209340-01	6
31	24	(P13 THRU P16)	PIN, MATE-N-LOK	1209378-01	7
8	8	(J1)	PIN, MATE-N-LOK	1209379-01	8
117	117		PIN, MATE-N-LOK PC MOUNT	1209456-	9
1	1		SHIELD	C-MD-7412192-0-0	10
~~2~~	~~2~~		~~GROUND LUG~~	~~9008150~~	~~11~~
1	1		BRACKET, CONN MTG	D-MD-7411704-0-0	12
2	2		EYELET	9009000	13
2	2		FASTON TAB	9008219-0	14
7	7		CABLE TIE .12 WIDE	9007880	15
2	2		SCREW, PHHD TRUSS 6-32 x .3125	9006021-03	16
2	2		WASHER, INT TOOTH #6	9006633	17
A/R	A/R		WIRE #14 AWG STRD (ORN)	9107370-33	18
A/R	A/R		WIRE #14 AWG STRD (BRN)	9107370-11	19
A/R	A/R		WIRE #14 AWG STRD (RED)	9107370-22	20
A/R	A/R		WIRE #14 AWG STRD (GRY)	9107370-88	21
A/R	A/R		WIRE #14 AWG STRD (BLK)	9107370-00	22
A/R	A/R		WIRE #14 AWG STRD (BLU)	9107370-66	23
A/R	A/R		WIRE #14 AWG STRD (YEL)	9107370-44	24
A/R	A/R		WIRE #14 AWG STRD (GRN)	9107370-55	25
A/R	A/R		WIRE #14 AWG STRD (VIO)	9107370-77	26
A/R	A/R		WIRE #14 AWG STRD (WHT)	9107370-99	27
A/R	REF		MATE-N-LOK FIXTURES	C-IA-9305937-0-0	28
2	2		FLAT WASHER #6	9006656	29
A/R	A/R	J3 THRU J12	DECAL, PWR CONN.	A-DC-7409873-01	30
A/R	A/R	J1	DECAL, PWR CONN.	A-DC-7409873-02	31
1	-		BAR, BUS, BATTERY BACKUP	1213497	32
A/R	A/R		WIRE #14 AWG GRN/YEL	9107777-54	33
1	1		TERMINAL, RING BLU	9007928	34
1	1		TERMINAL, RING YEL	9007926-01	35
A/R	A/R	P13 THRU P16	DECAL, PWR CONN.	A-DC-7409872-2	36
A/R	A/R	P13 THRU P16	DECAL, PWR BOARD	A-DC-7417991-0-0	37

FIRST USED ON OPTION MODEL: BAII-K

PARTS LIST

ETCH BOARD REV. D

DEC NO.	EIA NO.	DEC NO.	EIA NO.

SEMICONDUCTOR CONVERSION CHART

REV.	CHANGE NO.	CHK	ORIGINATED
C	5410864-1	X	30 SEPT 77 J. MERCURI
D			28 SEPT 77 D. Zwicker
E	5410864-00002		8-MAY-77 R. Kennedy
F	5410864-00003		3-MAY-77 R. WOLF
G	5410864-00004		10-MAY-77 D. Zwicker
H	5410864-00005		20-MAY-76 B. MINOR
J	5410864-00006		2-AUG-76 G. POTTER
K	5410864-00007		9-FEB-76 G. Glauber
L	5410864-00008		3 FEB 76 B. MINOR

DRN.	R. Beasley	DATE	6/14/74
CHK'D		DATE	7/1
ENG.	J.D. Caviglia	DATE	7/25/74
PROJ. ENG.		DATE	7/30/74
PROD.		DATE	7/24/74

NEXT HIGHER ASSY: D-UA-BAII-K-0

SCALE: NONE

SHEET 1 OF 3

digital

TITLE: POWER DISTRIBUTION BOARD

SIZE D | CODE CS | NUMBER 5410864-0-1 | REV. L

DIST.

"THIS DRAWING AND SPECIFICATIONS, HEREIN, ARE THE PROPERTY OF DIGITAL EQUIPMENT CORPORATION AND SHALL NOT BE REPRODUCED OR COPIED OR USED IN WHOLE OR IN PART AS THE BASIS FOR THE MANUFACTURE OR SALE OF ITEMS WITHOUT WRITTEN PERMISSION.
COPYRIGHT © 1974 DIGITAL EQUIPMENT CORPORATION"

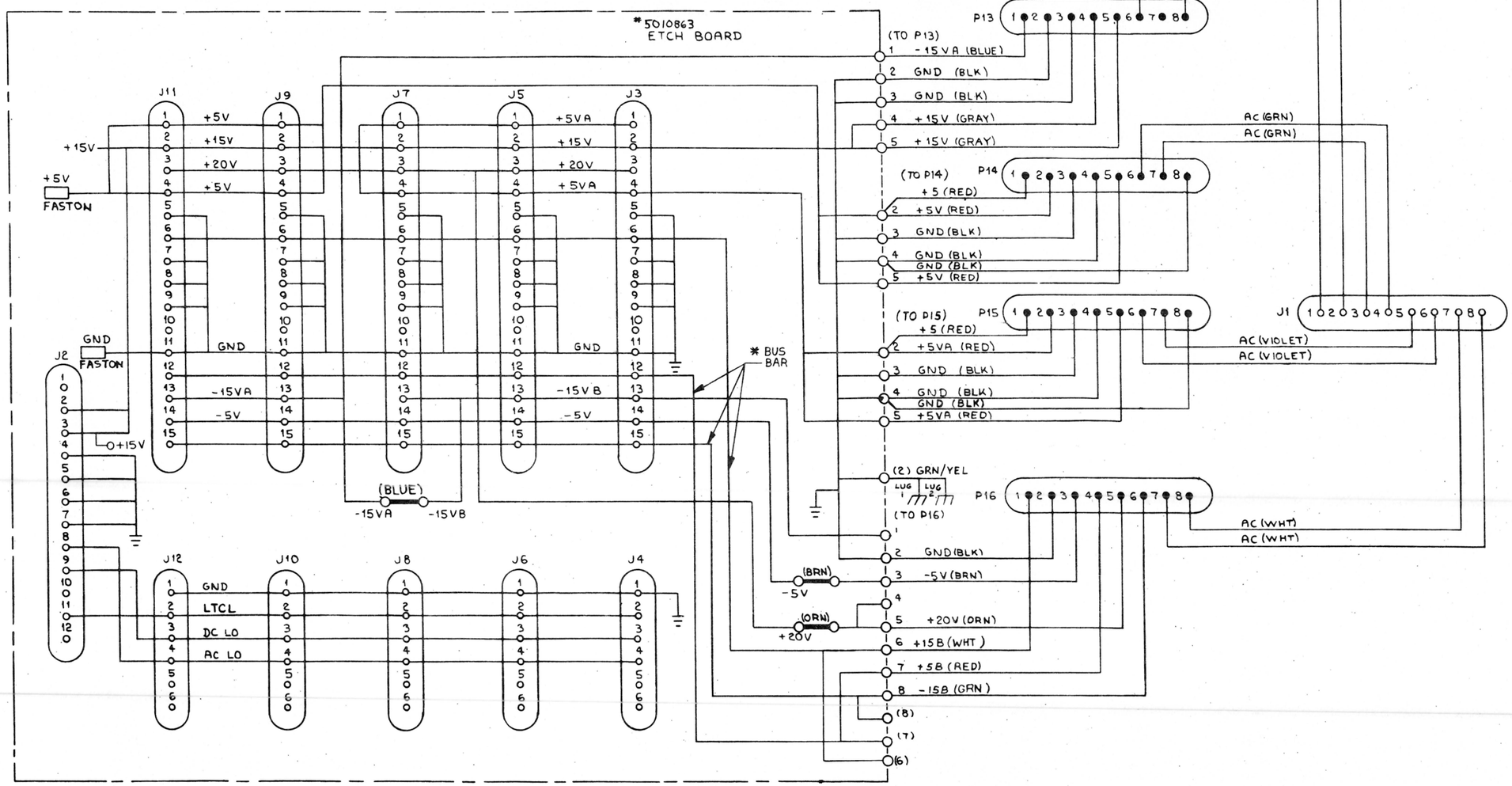

* BUS BAR USED IN THE YA VARIATION ONLY

REVISIONS		
CHK	CHANGE NO.	REV.

TITLE	SIZE	CODE	NUMBER	REV.
PWR DIST BOARD	D	CS	5410864-0-1	L
SCALE NONE	SHEET 2 OF 3	DIST.		

DEC FORM NO. DRD 120

"THIS DRAWING AND SPECIFICATIONS, HEREIN, ARE THE PROPERTY OF DIGITAL EQUIPMENT CORPORATION AND SHALL NOT BE REPRODUCED OR COPIED OR USED IN WHOLE OR IN PART AS THE BASIS FOR THE MANUFACTURE OR SALE OF ITEMS WITHOUT WRITTEN PERMISSION.
COPYRIGHT ©1974, DIGITAL EQUIPMENT CORPORATION"

WIRE TABLE

ITEM NO	DESCRIPTION AWG	DESCRIPTION COLOR	FROM CONNECTION	FROM WITH	TO CONNECTION	TO WITH	LENGTH	SIGNAL NAME
24	14	YEL	J1-1	8	P13-8	7	12.5"	AC/H745
24	↑	YEL	J1-2	↑	P13-6	↑	12.5"	AC/H745
25		GRN	J1-3		P14-7		11"	AC/H744-1
25		GRN	J1-4		P14-6		11"	AC/H744-1
26		VIO	J1-5		P15-7		8.75"	AC/H744-2
26		VIO	J1-6		P15-6		8.75"	AC/H744-2
27		WHT	J1-7	↓	P16-8		11.25"	AC/H754
27		WHT	J1-8	8	P16-7		11.25"	AC/H754
23		BLU	PDBP13-1	SOLDER	P13-1		5"	-15V
22		BLK	PDBP13-2	↑	P13-2		↑	GND
22		BLK	PDBP13-3		P13-3			GND
21		GRY	PDBP13-4		P13-4			+15V
21		GRY	PDBP13-5		P13-5			+15V
20		RED	PDBP14-2		P14-2			+5V
22		BLK	PDBP14-3		P14-3			GND
22		BLK	PDBP14-4		P14-4			GND
20		RED	PDBP14-5		P14-5			+5V
20		RED	PDBP15-2		P15-2			+5V
22		BLK	PDBP15-3		P15-3			GND
22		BLK	PDBP15-4		P15-4			GND
20		RED	PDBP15-5		P15-5			+5V
22		BLK	PDBP16-2		P16-2			GND
19		BRN	PDBP16-3		P16-3			-5V
						↓	↓	
18		ORN	PDBP16-5		P16-5	7	5"	+20V
23		BLU	PDP-15A		PDB-15B	SOLDER	1.75	-15V
18		ORN	PDBP16-5	↓	PDB + 20V	↑	5"	+20V
19		BRN	PDBP16-3	SOLDER	PDB - 5V	↓	2"	-5V
33		GRN/YEL	LUG 1	35	PDBP16-2	SOLDER	11"	SAFETY GND
33					LUG 2	34	15"	SAFETY GND
20		RED	PDBP16-7	SOLDER	P16-4	7	5.5"	+5B
20		RED	PDBP15-1	↑	P15-1	↑	5"	+5V
20		RED	PDBP14-1		P14-1		5"	+5V
22		BLK	PDBP15-4		P15-8		5.5"	GND
22		BLK	PDBP14-4		P14-8		↑	GND
27		WHT	PDBP16-6	↓	P16-1	↓	↓	+15B
25	14	GRN	PDBP16-8	SOLDER	P16-6	7	5.5"	-15B

YA VARIATION ONLY. — SEE NOTE 1

BUS BAR CONNECTIONS FOR YA VARIATION

LEVEL A	PDBP16-6 J11,J9,J7,J5,J3 ALL PIN #6	+15V.B
LEVEL B	PDBP16-7 J11,J9,J7,J5,J3 ALL PIN #12	+5V
LEVEL C	PDBP16-8 J11,J9,J7,J5,J3 ALL PIN #15	-15V.B

NOTES:

1. CS REV. K AND EARLIER PWR DISTRIBUTION BOARDS HAD THE GREEN AND WHITE WIRES REVERSED IN COLOR ONLY. THE POINT-TO-POINT CONNECTIONS REMAIN THE SAME.

REVISIONS		
CHK	CHANGE NO.	REV.

TITLE	SIZE	CODE	NUMBER	REV.
PWR DIST BOARD	D	CS	5410864-0-1	L
SCALE NONE — SHEET 3 OF 3	DIST.			

DEC FORM NO.

"THIS DRAWING AND SPECIFICATIONS, HEREIN, ARE THE PROPERTY OF DIGITAL EQUIPMENT CORPORATION AND SHALL NOT BE REPRODUCED OR COPIED OR USED IN WHOLE OR IN PART AS THE BASIS FOR THE MANUFACTURE OR SALE OF ITEMS WITHOUT WRITTEN PERMISSION. COPYRIGHT © 1976, DIGITAL EQUIPMENT CORPORATION"

LEGEND

NUMBER	VARIATION
7012500-0	120V
7012500-1	240V

WIRE TABLE (7012500-0)

ITEM NO.	DESCRIPTION AWG	DESCRIPTION COLOR	FROM CONNECTION	FROM WITH	TO CONNECTION	TO WITH	REMARKS
2	14	BRN	P1-B	—	B	6	AC LINE
2	14	LT BLU	P1-A	—	A	6	AC NEUTRAL
2	14	GRN/YEL	P1-C	—	C	6	AC SAFETY GND

WIRE TABLE (7012500-1)

ITEM NO.	DESCRIPTION AWG	DESCRIPTION COLOR	FROM CONNECTION	FROM WITH	TO CONNECTION	TO WITH	REMARKS
2	14	BRN	P1-B	—	B	6	LINE
2	14	LT BLU	P1-A	—	A	6	NEUTRAL
2	14	GRN/YEL	P1-C	—	C	6	AC SAFETY GND

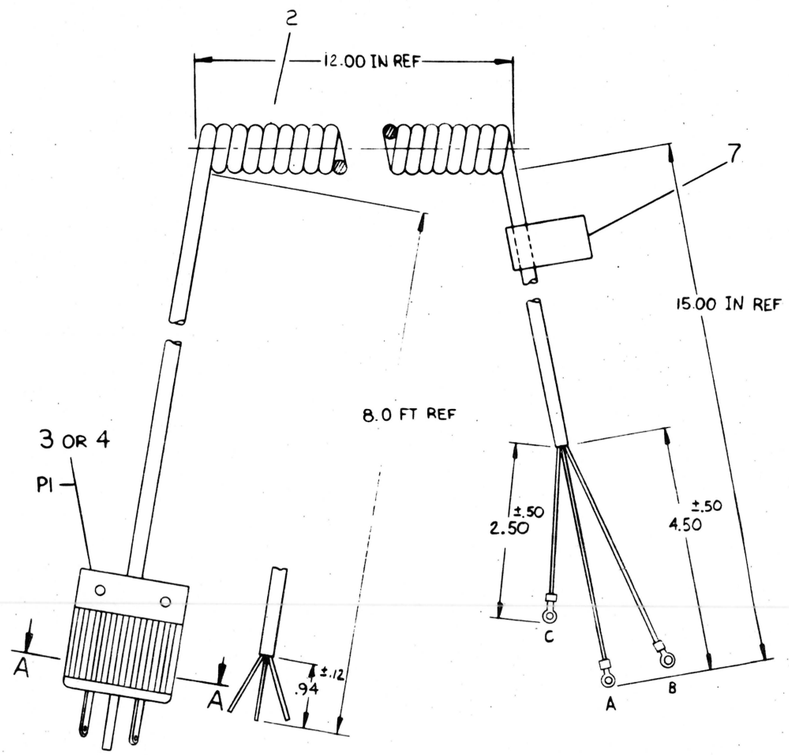

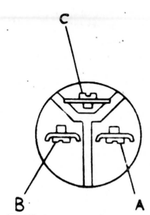

SECTION A-A
WIRING SIDE

1	1	LABLE, I.D.	3616073-00	7
3	3	TERMINAL, RING TONGUE	9007928	6
~~2~~	~~2~~	~~TERMINAL, QUICK CONNECT~~	~~9007919-0~~	~~5~~
1	-	PLUG, 240 V	9008853	4
-	1	PLUG, 120 V	9008938	3
1	1	POWER CORD	1700065-0	2
~~-~~	~~1~~	~~POWER CORD~~	~~1700065-1~~	~~1~~
7012500-1	7012500-0	DESCRIPTION	DWG./PART NO.	ITEM NO.

UNLESS OTHERWISE SPECIFIED DIMENSIONS ARE IN INCHES

ANGLES ±0° 30'	CLASS OF ACCURACY (CHECK ONE)	NOMINAL DIMENSION RANGE INCHES: OVER 0 TO 0.2	OVER 0.2 TO 1.2	OVER 1.2 TO 4.0	OVER 4.0 TO 12.0	OVER 12.0 TO 40.0	OVER 40.0 TO 80.0
SURFACE QUALITY IN MICROINCHES	MEDIUM	±.004	±.008	±.012	±.016	±.024	±.04
	PREFERRED	±.012	±.016	±.025	±.04	±.063	±0.1

QUANTITY & VARIATION

THIRD ANGLE PROJECTION

REMOVE BURRS AND BREAK SHARP CORNERS

DO NOT SCALE DWG

MATERIAL: SEE PARTS LIST

FINISH: —//—

DRN. R. Beasley 2-27-76
CHK'D 3 MAR 76
ENG. Paul Pavica 3 Mar 76
PROJ. ENG. 5 Jan 76
PROD. 3/4/76

NEXT HIGHER ASSY. 7009811-0-0

SCALE NONE

SHEET 1 OF 1

FIRST USED ON BA11-K

digital

TITLE: POWER CORD 120V 240V

SIZE D | CODE IA | NUMBER 7012500-0-0 | REV. C

DIST.

TW 1

REVISIONS

CHK	CHANGE NO.	REV.
	7009811-00004	A
	R. WOLF	
	7009811-00007	B
	R. KENNEDY	
	7012500-TW001	C
	E. CROCKER	

"THIS DRAWING AND SPECIFICATIONS, HEREIN, ARE THE PROPERTY OF DIGITAL EQUIPMENT CORPORATION AND SHALL NOT BE REPRODUCED OR COPIED OR USED IN WHOLE OR IN PART AS THE BASIS FOR THE MANUFACTURE OR SALE OF ITEMS WITHOUT WRITTEN PERMISSION.
COPYRIGHT © 1979 DIGITAL EQUIPMENT CORPORATION"

+25 TO +45 VDC

R8 47Ø 2W

R13 1K 2W

TP3

C25 18pf

R21 3ØK

Q3 MPS AØ5

R2Ø 1K

R18 1K

Q5 MPS AØ5

R19 3ØK

C6 18pf

C5 .22uf 5ØV

TM1

D22 D672

D8 D672 D9 D672

C7 .22uf 5ØV

D1Ø IN4744 15V

R48 75Ø

Q19 MPS AØ5

5 -1ØV TO -15V (TEST POINT)

(ENG OPTION SEE NOTE 1) R46 1/2W

Q15 2N5433

Q18 2N5433

R47 1ØK

R49 22Ø

R43 1ØK

3 AC-LO 1

8 AC LO 2

4 LO GND

D15 D672 AC-2

D16 D672 AC-1

20V TO 33V RMS AC INPUT

R34 5.11K 1%

R33 5.11K 1%

C24 .22uf 5ØV

C2Ø 1.5uf 35V

R32 18.2K 1%

TP1

Q16 2N4250

Q13 2N4250

Q12 2N4250

Q11 2N4250

C21 33Øpf

C18 33Ø pf

C17 33Ø pf

C16 33Ø pf

R31 2.61K 1%

TP2

R3Ø 9.09K 1%

R29 3.48K 1%

R26 5.62K 1%

TP5

R27 4.99K 1%

C8 2.2uf 35V

R25 3.16K 1%

W3

W2

D14 5.1V

D13 5.1V

C22 .01uf 1ØØV

C23 .01uf 1ØØV

R28 1K 1%

C19 .01uf 1ØØV

RETURN

+25 TO +45VDC

R44 75Ø

Q1Ø MPS AØ5

Q17 2N5433

Q14 2N5433

1 DC LO 2

2 DC LO 1

R45 1/2W (SEE NOTE 1 ENG. OPTION)

TO 20V TO 33V RMS AC INPUT

AC-1 15

AC-2 14

C1 8200uf 5ØV

R15 3.3K 1W

D11

R22 39Ω 2W

D19 3.9V 1N748A

C14 .22uF 5ØV

6 LINE CLK L

POWER FAIL CIRCUIT

NOTES

1. R45, R46, C4, C9 & C11 ARE NOT USED ON BASIC 5411086 BUT ARE RESERVED FOR PLANNED FUTURE MODULE VARIATIONS.
2. ** TOTAL +15V & +8V CURRENT NOT TO EXCEED 4.0 AMPERES.
3. W1 (TEST JUMPER) MAY BE TEMPORARILY REMOVED WHILE TROUBLE-SHOOTING TO DETERMINE IF LOSS OF 15V IS DUE TO CROWBAR CIRCUITRY. BUT MUST BE IN THE BOARD FOR NORMAL OPERATION.
4. YA VERSION DOES NOT CONTAIN +15VDC REG.

REVISIONS	REV.	CHK	CHANGE NO.
	M	R. KENNEDY	ML008
		CARTER	
		G. Baron	

5411086 TWD09 B
A. BARON

DRN	DPOWERS	1-17-79
CHK'D		2-15-79
ENG.	a. Baron	2-6-79
PROJ. ENG.	a. Baron	2-6-79
PROD		2-15-79
NEXT HIGHER ASSY.	B-DD-5411086-0	
SCALE	NONE	
SHEET	1 OF 2	

FIRST USED ON digital

TITLE POWER LINE MONITOR 15V REG

SIZE D | CODE CS | NUMBER 5411086-0-1 | REV. N | DIST.

TW 1

"THIS DRAWING AND SPECIFICATIONS, HEREIN, ARE THE PROPERTY OF DIGITAL EQUIPMENT CORPORATION AND SHALL NOT BE REPRODUCED OR COPIED OR USED IN WHOLE OR IN PART AS THE BASIS FOR THE MANUFACTURE OR SALE OF ITEMS WITHOUT WRITTEN PERMISSION.
COPYRIGHT © 1974 DIGITAL EQUIPMENT CORPORATION"

+25 TO +45 VDC

F1

25 - 45 VDC

C3 .01uf

R14 220 2W, 10%

D12 IN3880

L1 500uH

Q7 MJE 3055

R9 27 1/2W

Q4 MPS A55

R12 220

R10 2.2K 1W, 10%

R11 680 2W

TP4

+15V

R35 29.9K 1%

4.28V

D4 IN4004

D3 MR1033B

D5 IN2970B 6.8V

R41 100 1W

9 +15VDC ± 5% 10 @ 4A MAX (SEE NOTE 2)

7 +8VDC ± 10% @ 1A MAX (SEE NOTE 2)

W1 (SEE NOTE 3)

C12 2.2uf 35V

D17 IN4794 15V ± 10%

1/2 723C E1

REF

COMP

R36 511 1%

R24 200 4.28V

R17 1K 1%

R39 909 1%

C15 2.2uf 35V

R16 22K 1%

R23 47

Q6 MPS A05

R7 100

D1 D672

C2 56pf

R2 750

D2 IN748A 3.9V

R3 3.3K

Q1 2N4250

R1 1.5K 1/2W

R42 10K 1%

R38 680

R37 10

Q9 MPS A55

Q8 2N4441

C13 .01uf

R40 100

D18 IN967A 18V

C10 500uf 25V

C4 50uf 50V

C9 50uf 50V

C11 50uf 50V

SEE NOTE #1

11 GND

12 GND

13 GND

Q2 MPS A05

R4 220

R6 .2 5W

R5 .2 5W

W4 FOR YA VERSION

RETURN

15V REGULATOR
(SEE NOTE #4)

REVISIONS		
CHK	CHANGE NO	REV.

TITLE	SIZE	CODE	NUMBER	REV.
PWR. LINE MONITOR/15V REG.	D	CS	5411086-0-1	N
SCALE —	SHEET 2 OF 2	DIST.		

DEC FORM NO. DRG 130

TW

"THIS DRAWING AND SPECIFICATIONS, HEREIN, ARE THE PROPERTY OF DIGITAL EQUIPMENT CORPORATION AND SHALL NOT BE REPRODUCED OR COPIED OR USED IN WHOLE OR IN PART AS THE BASIS FOR THE MANUFACTURE OR SALE OF ITEMS WITHOUT WRITTEN PERMISSION.
COPYRIGHT ©1975, DIGITAL EQUIPMENT CORPORATION"

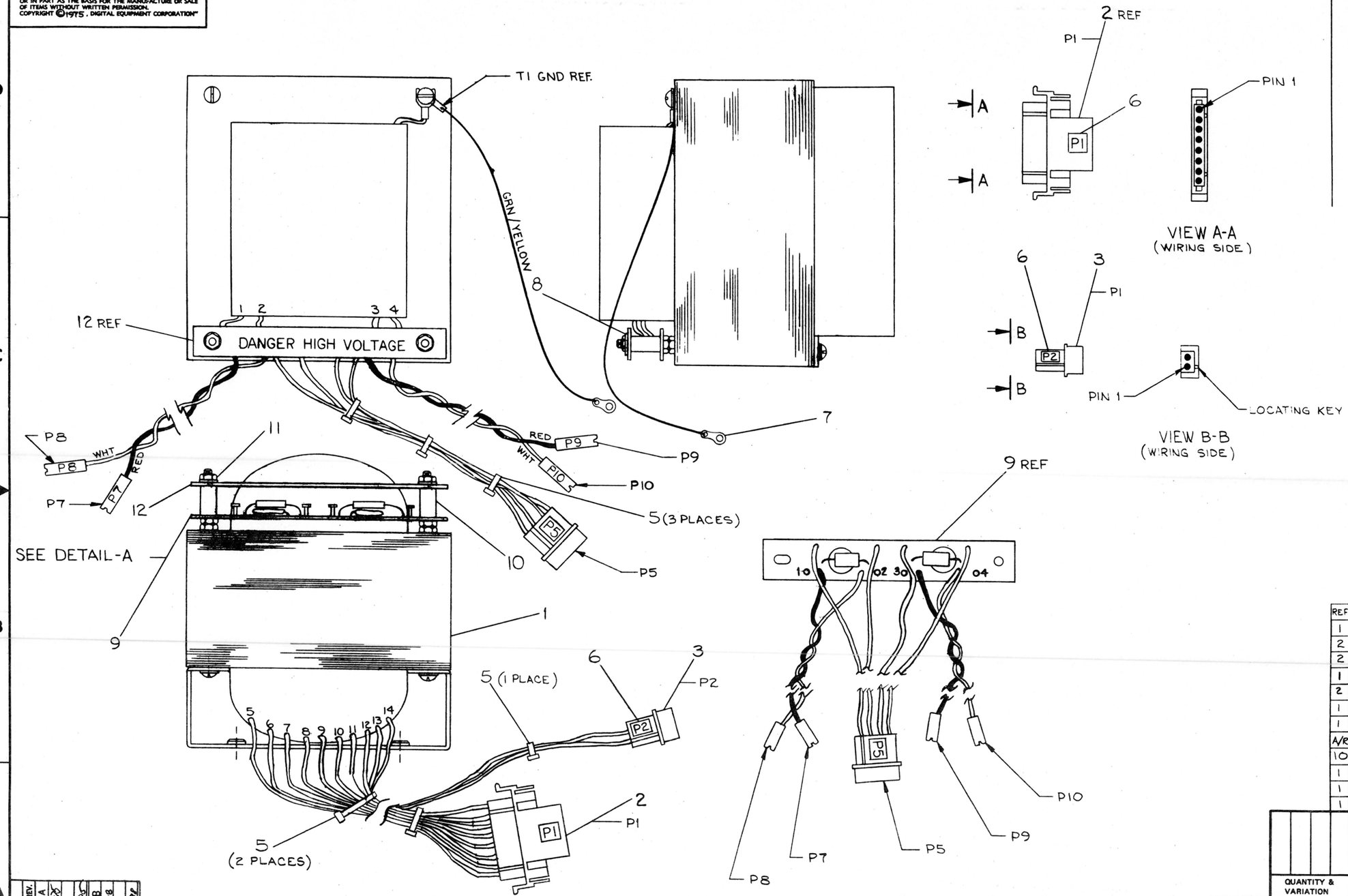

REF	TRANSFORMER ASS'Y PROCEDURE	A-SP-7011486-0-9	13
1	COVER	C-IA-7414301-0-0	12
2	NUT, KEP #10-32	9006565	11
2	SPACER, 3/8 OD X 1/2 LG	9007831	10
1	CAP MOV BOARD ASSY	D-IA-7011751-0-0	9
2	WASHER, FLAT .437 X .218 ID	9006664	8
1	GROUND LUG	9008150	7
1	DECAL	A-DC-7409872-0-0	6
A/R	CABLE TIES 5 1/4 L X 1/3 W	9007880	5
10	PIN, MALE	1209378-1	4
1	CONN., 2 PIN	1210822-2	3
1	CONN., 8 PIN	1209340-01	2
1	TRANSFORMER	1612524	1
	DESCRIPTION	DWG./PART NO.	ITEM NO.

UNLESS OTHERWISE SPECIFIED DIMENSIONS ARE IN INCHES

ANGLES ±0° 30'	CLASS OF ACCURACY (CHECK ONE)	NOMINAL DIMENSION RANGE INCHES					
SURFACE QUALITY IN MICROINCHES		OVER 0 TO 0.2	OVER 0.2 TO 1.2	OVER 1.2 TO 4.0	OVER 4.0 TO 12.0	OVER 12.0 TO 40.0	OVER 40.0 TO 80.0
	MEDIUM	±.004	±.008	±.012	±.016	±.024	±.04
	PREFERRED	±.012	±.016	±.025	±.04	±.063	±0.1

QUANTITY & VARIATION

THIRD ANGLE PROJECTION

REMOVE BURRS AND BREAK SHARP CORNERS

DO NOT SCALE DWG

MATERIAL: SEE PARTS LIST

FINISH: —/—/—

DRN. T. Quillin
CHK'D
ENG. Rob B. Kennedy 18 SEP 75
PROJ. ENG. R. J. Wolf 18 SEP 75
PROD. Jim Bonnette 18 SEP 75

NEXT HIGHER ASSY. D-UA-H782-0-0

SCALE 1/1

SHEET 1 OF 2

FIRST USED ON H782

digital

TITLE: TRANSFORMER ASS'Y

SIZE D | CODE AD | NUMBER 7011486-0-0 | REV. B

DIST.

REV.	CHANGE NO.	CHK	REVISIONS
A	7011486-00001	JJ	15-OCT-75
B	7011486-00002	JA	14-APR-78
			R. KENNEDY 27 APR 78

"THIS DRAWING AND SPECIFICATIONS, HEREIN, ARE THE PROPERTY OF DIGITAL EQUIPMENT CORPORATION AND SHALL NOT BE REPRODUCED OR COPIED OR USED IN WHOLE OR IN PART AS THE BASIS FOR THE MANUFACTURE OR SALE OF ITEMS WITHOUT WRITTEN PERMISSION.
COPYRIGHT ©1975 DIGITAL EQUIPMENT CORPORATION"

WIRE TABLE

ITEM NO.	DESCRIPTION AWG	DESCRIPTION COLOR	FROM CONNECTION	FROM WITH	TO CONNECTION	TO WITH	WIRE LENGTH
1	14	BLK	T1-1	—	CAP MOV BD-1	SOLDER	1.5 IN
↑	↑	↑	T1-2	—	CAP MOV BD-2	SOLDER	2.0 IN
			T1-3	—	CAP MOV BD-3	SOLDER	2.0 IN
			T1-4	—	CAP MOV BD-4	SOLDER	1.5 IN
			T1-5	—	P1-8	ITEM 4	12.0 IN
			T1-6	—	P1-7	↑	↑
			T1-7	—	P1-6		
			T1-8	—	P1-5		
			T1-9	—	P1-4		
			T1-10	—	P1-3		
			T1-11	—	P1-2	↓	
			T1-12	—	P1-1	ITEM 4	
↓	↓	↓	T1-13	—	P2-1	ITEM 4	↓
1	14	BLK	T1-14	—	P2-2	ITEM 4	12.0 IN
1	14	GRN/YEL	T1-GND	—	GND LUG (ITEM 7)	SOLDER	16.0 IN

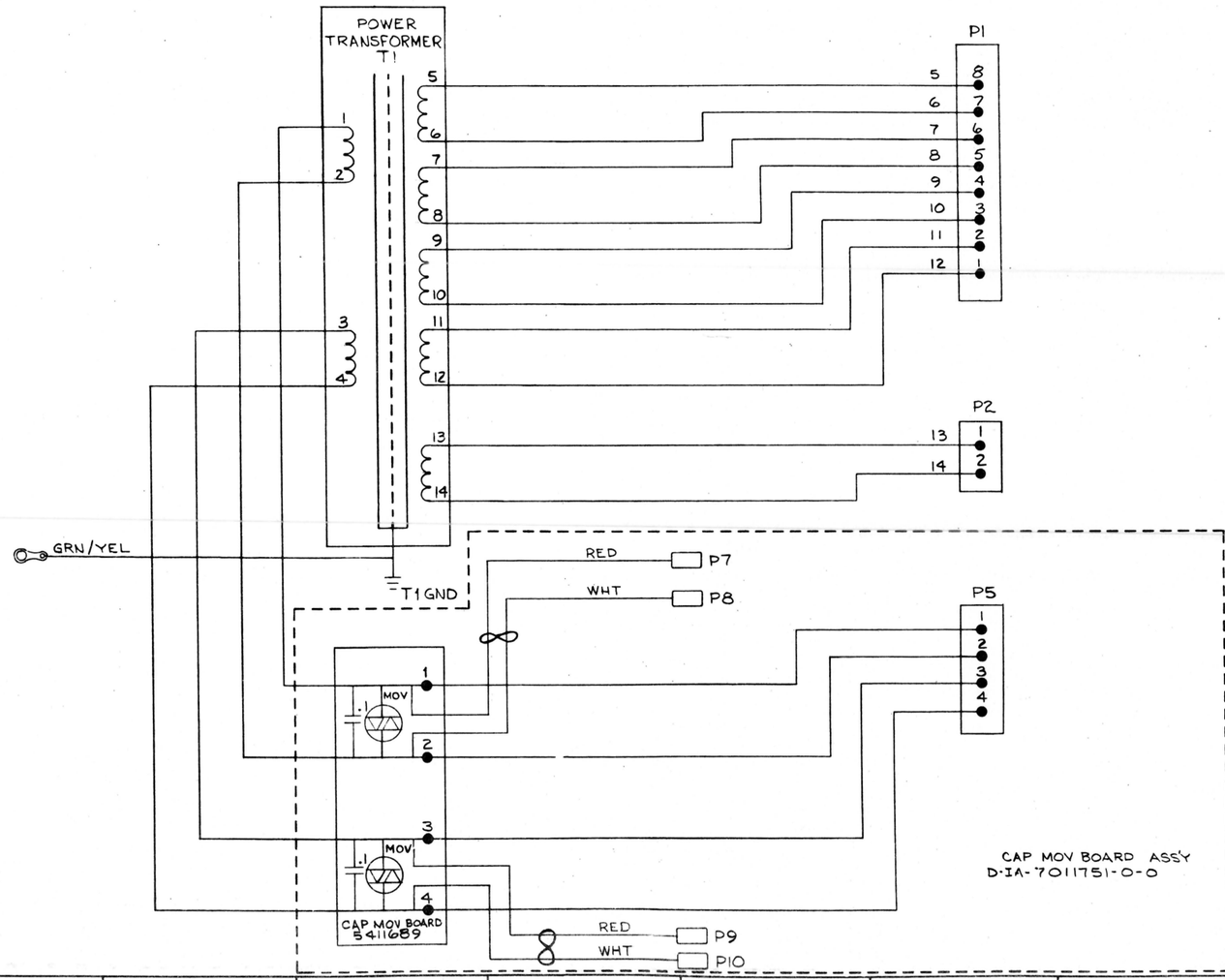

REVISIONS		
CHK	CHANGE NO.	REV.

DEC FORM NO.

TITLE	SIZE	CODE	NUMBER	REV.
TRANSFORMER ASSY	D	AD	7011486-0-0	B
SCALE —	SHEET 2 OF 2		DIST.	

SIZE D CODE AD NUMBER 7011486-0-0 REV B

This drawing and specifications, herein, are the property of Digital Equipment Corporation and shall not be reproduced or copied or used in whole or in part as the basis for the manufacture or sale of items without written permission. 1973

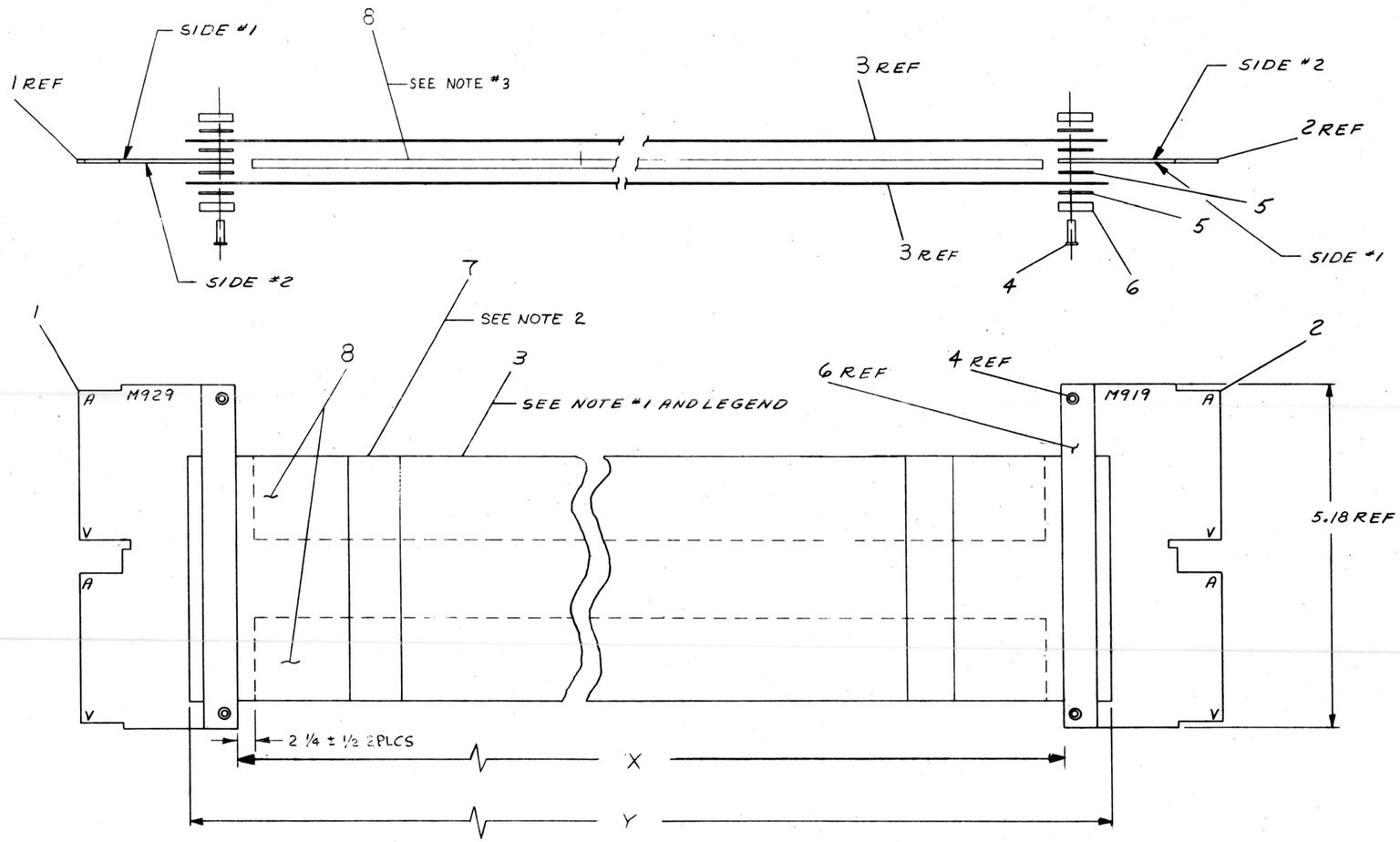

NOTES:

1. VARIATIONS AND LENGTHS SHOWN IN LEGEND ARE STANDARD. OTHER THAN STANDARD VARIATIONS WILL BE SPECIFIED BY ALPHANUMERIC DESIGNATION. FOR LENGTHS OTHER THAN FOOT INCREMENTS FROM ONE (1) FOOT THRU NINE (9) FEE ELEVEN (11) INCHES.

A = 1"	G = 7"
B = 2"	H = 8"
C = 3"	J = 9"
D = 4"	K = 10"
E = 5"	L = 11"
F = 6"	

EXAMPLE: BC11A - 3D = 3'4".
LENGTHS WILL BE IN FOOT INCREMENTS FROM TEN (10) FEET ON, AND WILL BE SPECIFIED BY THE CORRESPONDING NUMERICAL DESIGNATION.
EXAMPLE: BC11A - 11 = 11 FEET.
THE TOLERANCE ON DIMENSION "A" WILL BE 2% OF THE FOOT INCREMENT.

2. FLEXPRINTS TO BE BOUND TOGETHER BY WRAPPING WITH ELECTRICAL TAPE (ITEM 7) EVERY 18 INCHES.

3. INSTALL 2 PIECES OF FOAM TAPE (ITEM 8) BETWEEN FLEX PRINT CABLES AS SHOWN.

QTY.	DESCRIPTION	PART NO.	ITEM NO.
A/R	GRAY FOAM - 3" WIDE	9008881-01	8
A/R	ELECTRICAL TAPE	9009260	7
4	CLAMP, CABLE	C-SC-1209764-0-0	6
A/R	TAPE #4032 1/4 W X 3 11/16 LG	9007834-01	5
4	EYELET GS-4-11 STIMSON	9006750	4
2	CABLE, "FLEXPRINT"	1700002-01	3
1	EXT. BUS CONN	A-PL-M919-0-0	2
1	BUS CONN	A-PL-M929-0-0	1

PARTS LIST

REVISIONS

CHK	CHANGE NO.	REV.
	BC11A-00001	A
	BC11A-00002	B
	BC11A-00003	C
	BC11A-00004	D
	BC11A-00005	E
	BC11A-00006	F
	BC11A-00007	H

FIRST USED ON OPTION/MODEL: PDP11

DO NOT SCALE DRAWING
UNLESS OTHERWISE SPECIFIED
DIMENSION IN INCHES
TOLERANCES
DECIMALS ± .005 FRACTIONS ± 1/64 ANGLES ± 0°30'
FINAL SURFACE QUALITY
REMOVE BURRS AND BREAK SHARP CORNERS

MATERIAL

FINISH

DRN. DATE 11-14-69
CHK'D. DATE 11/19/69
ENG. DATE 11/21/69
PROJ. ENG. DATE 11/21/69
PROD. DATE 11/26/69

NEXT HIGHER ASSY: D-UA-11/20-0-0

SCALE 1/1
SHEET 1 OF 2

digital EQUIPMENT CORPORATION
MAYNARD, MASSACHUSETTS

TITLE: CABLE ASSY (BC11A)

SIZE D CODE UA NUMBER BC11A-0-0 REV. H
DIST. G

DEC FORM NO. DRD 100

"THIS DRAWING AND SPECIFICATIONS, HEREIN, ARE THE PROPERTY OF DIGITAL EQUIPMENT CORPORATION AND SHALL NOT BE REPRODUCED OR COPIED OR USED IN WHOLE OR IN PART AS THE BASIS FOR THE MANUFACTURE OR SALE OF ITEMS WITHOUT WRITTEN PERMISSION.
COPYRIGHT ©1975 DIGITAL EQUIPMENT CORPORATION"

LEGEND

NUMBER	DIM "X" VARIATION	DIM "Y" (PRECUT) REF.
BC11A-02	2'0" ± 0.5"	2'1.5"
BC11A-03	3'0" ± 1.0"	3'1.5"
BC11A-04	4'0" ± 1.0"	4'1.5"
BC11A-05	5'0" ± 1.0"	5'1.5"
BC11A-06	6'0" ± 1.0"	6'1.5"
BC11A-07	7'0" ± 2.0"	7'1.5"
BC11A-08	8'0" ± 2.0"	8'1.5"
BC11A-09	9.0" ± 2.0"	9'1.5"
BC11A-10	10'0" ± 2.0"	10'1.5"
BC11A-11	11'0" ± 3.0"	11'1.5"
BC11A-12	12'0" ± 3.0"	12'1.5"
BC11A-13	13'0" ± 3.0"	13'1.5"
BC11A-14	14'0" ± 3.0"	14'1.5"
BC11A-15	15'0" ± 4.0"	15'1.5"
BC11A-16	16'0" ± 4.0"	16'1.5"
BC11A-17	17'0" ± 4.0"	17'1.5"
BC11A-18	18'0" ± 4.0"	18'1.5"
BC11A-19	19'0" ± 5.0"	19'1.5"
BC11A-20	20'0" ± 5.0"	20'1.5"
BC11A-21	21'0" ± 5.0"	21'1.5"
BC11A-22	22'0" ± 5.0"	22'1.5"
BC11A-23	23'0" ± 6.0"	23'1.5"
BC11A-24	24'0" ± 6.0"	24'1.5"
BC11A-25	25'0" ± 6.0"	25'1.5"
BC11A-0F	0'6" ± 0.5"	0'7.5"
BC11A-8F	8'6" ± 2.0"	8'7.5"

REVISIONS		
CHK	CHANGE NO	REV.

TITLE	SIZE	CODE	NUMBER	REV.
CABLE ASSY (BC11A)	D	UA	BC11A-0-0	H
SCALE —/— SHEET 2 OF 2	DIST.			

DEC FORM NO DRD 137

THIS SCHEMATIC IS FURNISHED ONLY FOR TEST AND MAINTENANCE PURPOSES. THE CIRCUITS ARE PROPRIETARY IN NATURE AND SHOULD BE TREATED ACCORDINGLY.
COPYRIGHT 1969 BY DIGITAL EQUIPMENT CORPORATION

SIZE	CODE	NUMBER	REV
B	CS	M919-0-1	D

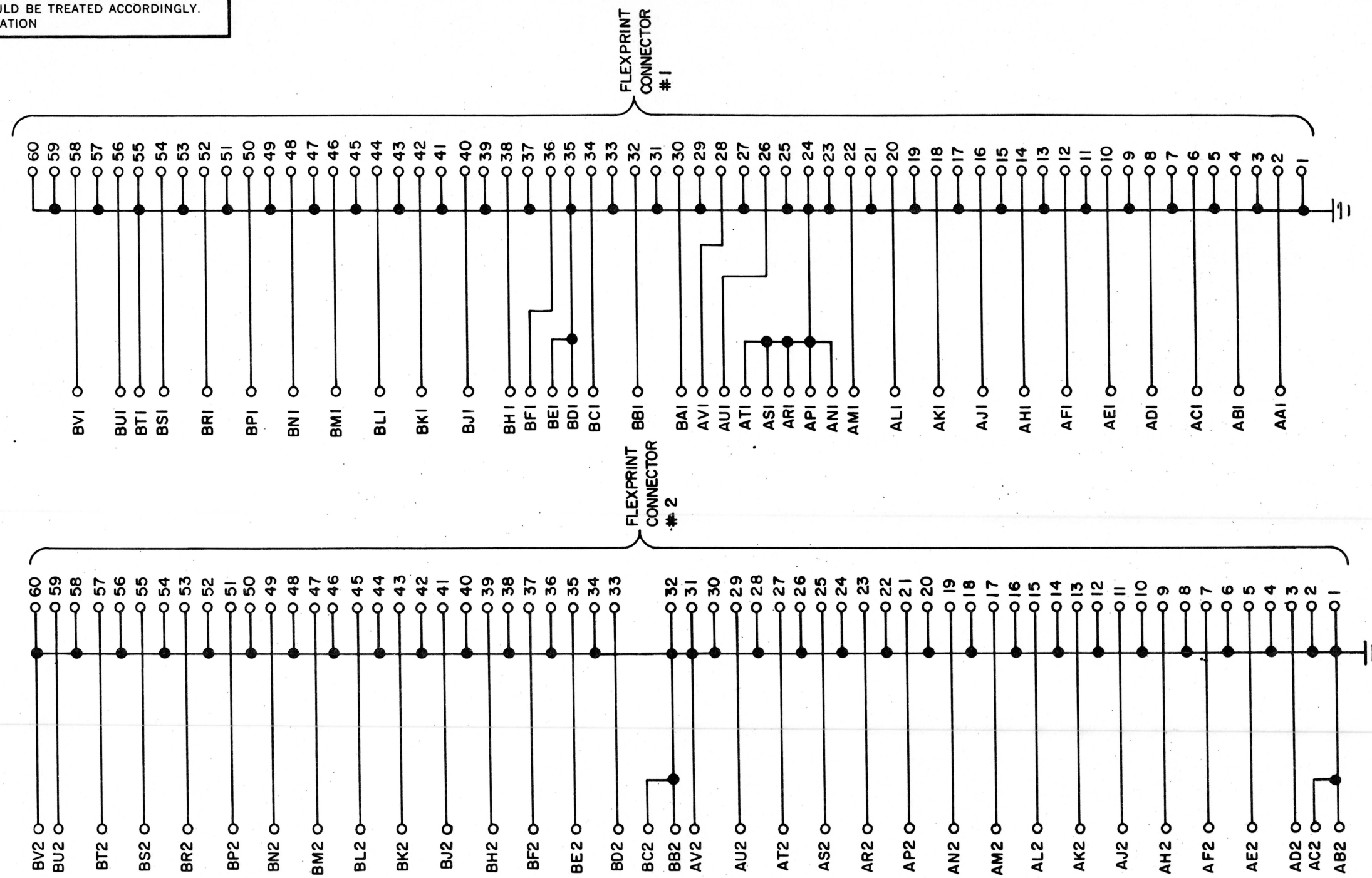

REVISIONS	CHK	CHG NO.	REV.
		00001	A
		ML002	B

DRN. BUTLER	DATE 10/17/69	
CHK'D G. Hargrave	DATE 10-20-69	
ENG. C Blasi	DATE 11-7-69	
PROD.	DATE	

TRANSISTOR & DIODE CONVERSION CHART

DEC	EIA	DEC	EIA

digital EQUIPMENT CORPORATION
MAYNARD, MASSACHUSETTS

TITLE: BUS CONNECTOR M919

SIZE	CODE	NUMBER	REV.
B	CS	M919-0-1	B

PRINTED CIRCUIT REV. B C

DEC FORM NO.
DRB 102

SIZE	CODE	NUMBER	REV.
B	CS	M929-0-1	A

THIS SCHEMATIC IS FURNISHED ONLY FOR TEST AND MAINTENANCE PURPOSES. THE CIRCUITS ARE PROPRIETARY IN NATURE AND SHOULD BE TREATED ACCORDINGLY.
COPYRIGHT 1969 BY DIGITAL EQUIPMENT CORPORATION

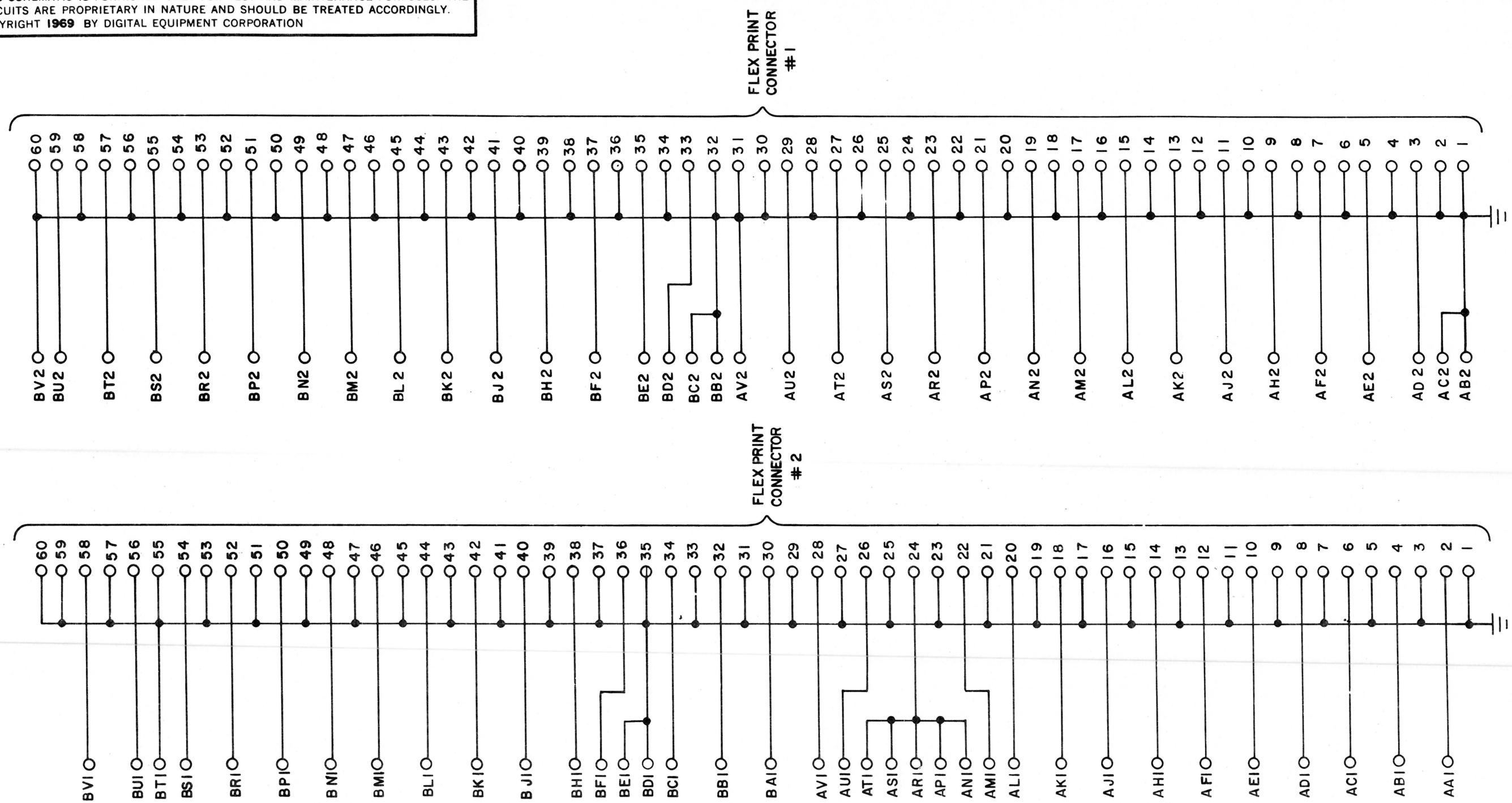

REVISIONS		
CHK	CHG NO.	REV.
	M1071	A

DRN.	G. Clemons	DATE 10-17-69
CHK'D	G. Yunga	DATE 10-20-69
ENG.	C. Blair	DATE 11/18/69
PROD.		DATE

TRANSISTOR & DIODE CONVERSION CHART

DEC	EIA	DEC	EIA

digital EQUIPMENT CORPORATION
MAYNARD, MASSACHUSETTS

TITLE
BUS CONNECTOR M929

SIZE	CODE	NUMBER	REV.
B	CS	M929-0-1	A

PRINTED CIRCUIT REV. ~~B~~ C

DEC FORM NO.
DRB 102

digital EQUIPMENT CORPORATION MAYNARD MASSACHUSETTS

DRAWING DIRECTORY

"THIS DRAWING AND SPECIFICATIONS, HEREIN, ARE THE PROPERTY OF DIGITAL EQUIPMENT CORPORATION AND SHALL NOT BE REPRODUCED OR COPIED OR USED IN WHOLE OR IN PART AS THE BASIS FOR THE MANUFACTURE OR SALE OF ITEMS WITHOUT WRITTEN PERMISSION. COPYRIGHT © , DIGITAL EQUIPMENT CORPORATION"

CUSTOMER PRINT SET INDEX

THIS IS PRINT SET

	SEQUENCE
DRAWING DIRECTORY	B-DD-861-0
POWER CONTROL, 861	E-UA-861-0-0
PILOT CONTROL	D-CS-5411522-0-1
CIRCUIT SCHEMATIC 861	D-CS-861-A-1
CIRCUIT SCHEMATIC 861	D-CS-861-B-1
CIRCUIT SCHEMATIC 861	D-CS-861-C-1
PACKAGING INSTRUCTION	A-PI-3700083-0-0
CIRCUIT SCHEMATIC 861	D-CS-861-F-1

UNIT VARIATIONS

VAR	TITLE	PRINT SET
861-A	POWER CONTROL, 861-A	
861-B	POWER CONTROL, 861-B	
861-C	POWER CONTROL, 861-C	
861-F	POWER CONTROL, 861-F	

REVISIONS

DATE	CHG. NO.	REV
2/73	861-3	A
8/74	861-4	B
12-74	861-6	C
4-75	861-7	D
7-75	861-8	E
2-76	861-9	F
4-76	861-10	H
8-76	861-11	J
9-76	861-12	K
1-77	861-13	L
10-77	861-14	M
4-79	861-15	N
6-79	861-16	P
11-79	861-ML017	R
1-80	861 ML018	S
3-80	861 ML019	T

USED ON OPTION/MODEL

SHEET 1 OF 3

		DATE
DRN.	SCHMIDT	9/13/72
CHK'D.	B. ALLEN	9/13/72
PROJ ENG.	JIM KALAGHER	9/13/72
PROD.	Fazio Paul	9/25/72
FIELD SERV.	Paton Irving	9/25/72

TITLE: 861 POWER CONTROL

SIZE	CODE	NUMBER	REV
B	DD	861-0	T

DIST

DEC 16-(325)-1062-1A-R972

DRB 106

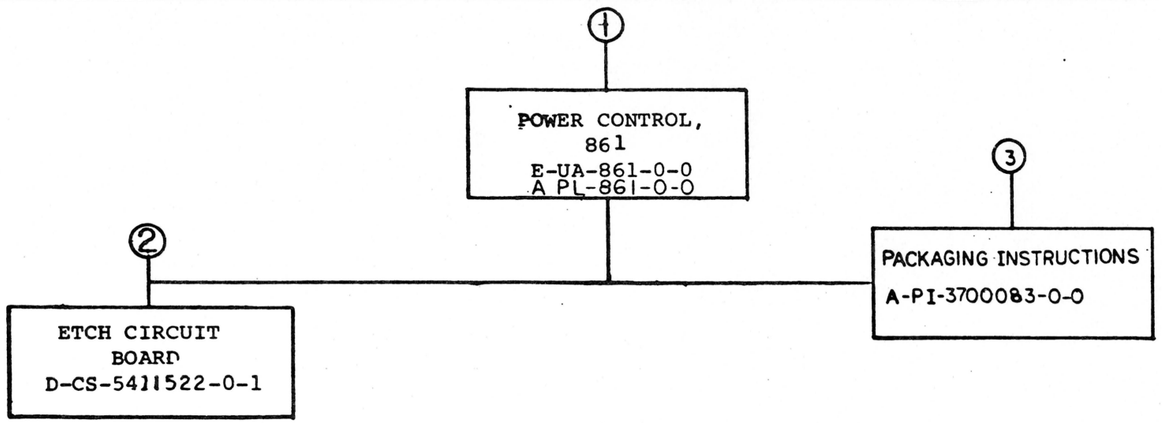

TITLE		SIZE	CODE	NUMBER	REV
POWER CONTROL	SHEET 2 OF 3	B	DD	861-0	T

DRB 107
DEC 16—(325)—1062—3—N871

ELECTRICAL

CUSTOMER PRINT SET 861-1	MFG. SET	FIND NO.	DRAWING NO.	REV	NO OF SHT	DESCRIPTION	OPTION NO./FILE DATE
x		1	D-CS-861-A-1	E	1	CIRCUIT SCHEMATIC, 861 P.C.	
x			D-CS-861-B-1	F	1	CIRCUIT SCHEMATIC, 861 P.C.	
x			D-CS-861-C-1	E	1	CIRCUIT SCHEMATIC, 861 P.C.	
			~~A-SP-861-0-1~~		~~2~~	~~TEST AND INSPECTION PRO.~~	
x			D-CS-861-F-1	D	1	CIRCUIT SCHEMATIC, 861 P.C.	
			A-SP-861-Ø-3	*		ENGINEERING SPEC 861/866	
X		2	D-CS-5411522-0-1	A	1	PILOT CONTROL	
			PC-5011522			ETCH CIRCUIT BOARD	
			K-CO-5411522-0-4			X Y COORDINATE HOLE LOCATION	
			D-AH-5411522-0-5			ASSY DRILLING HOLE LAYOUT	
			B-MH-5411522-0-6			MODULE ECO HISTORY	

MECHANICAL

CUSTOMER PRINT SET 861-1	MFG SET	FIND NO.	DRAWING NO.	REV	NO OF SHT	DESCRIPTION	OPTION NO./FILE DATE
x		1	E-UA-861-0-0	T	2	POWER CONTROL, 861	
			E-IA-7410567-0-0	C	1	CHASSIS, 861 PC	
			D-IA-7410568-0-0	C	2	COVER, 861 P.C.	
			A-PS-3611216-0-0			NAME PLATE 861-A	
			C-SS-3611216-0-1		1	NAME PLATE 861-A ARTWORK	
			A-PS-3611217-0-0			NAME PLATE 861-B	
			C-SS-3611217-0-1		1	NAME PLATE 861-B ARTWORK	
			A-PS-3611218-0-0			NAME PLATE 861-C	
			C-SS-3611218-0-1		1	NAME PLATE 861-C ARTWORK	
			A-PS-3612382-0-0			NAME PLATE 861-F	
			C-SS-3612382-0-1		1	NAME PLATE 861-F ARTWORK	
			A-PL-861-0-0	S	4	POWER CONTROL,861	
			A-SP-861-Ø-2	*	10	TEST AND INSPECTION PROCEDURE	
		3	A-PI-3700083-0-0		2	PACKAGING INSTRUCTIONS	
			A-PS-9905229-0-0		2	FULL OVER LAP CARTON	
			A-PS-9905228-0-0		2	EXPANDER POLYSTYRENE FOAM INSERT	

CUSTOMER PRINT SET CODES

X = PRINT OF DOCUMENT INCLUDED IN PRINT SET
C = INCLUDES ALL PRINTS INDICATED ON DOCUMENT
S = CONFIDENTIAL AUTHORIZED SIGNATURE REQUIRED

TITLE	SHEET	SIZE	CODE	NUMBER	REV
POWER CONTROL, 861	3 OF 3	B	DD	861-0	T

LEGEND			
DWG. NO.	VARIATION		
	VAC OUT	PHASES	AMP OUT
861-A	120	2	3
861-B	240	1	16
861-C	120	1	24
861-F	120	1	12

VIEW B-B

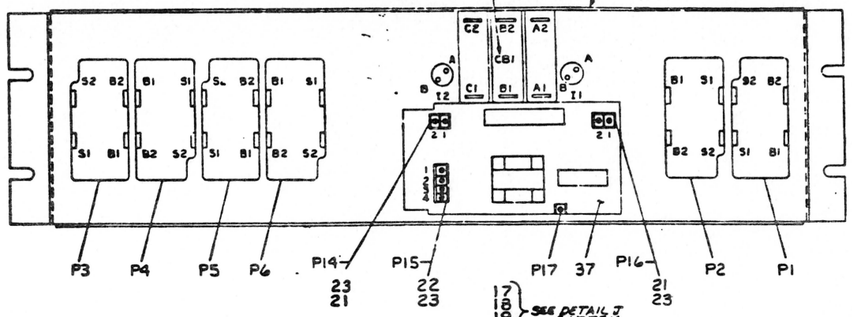

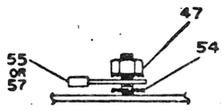

DETAIL "H"
SCALE: NONE

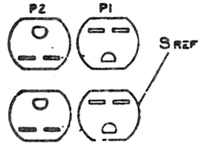

DETAIL "D"
RECEPTICALS FOR
VAR. 861-B ONLY

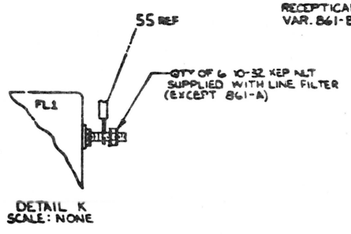

DETAIL K
SCALE: NONE

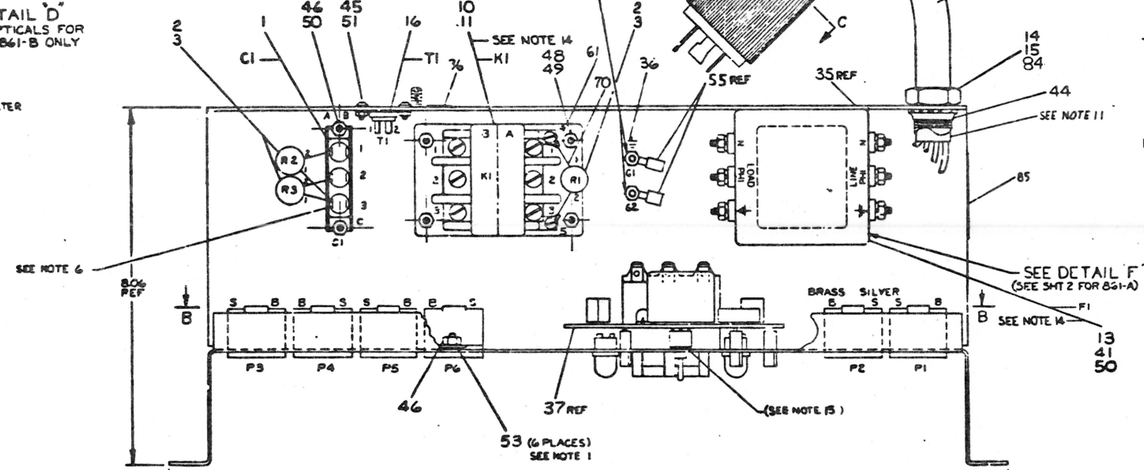

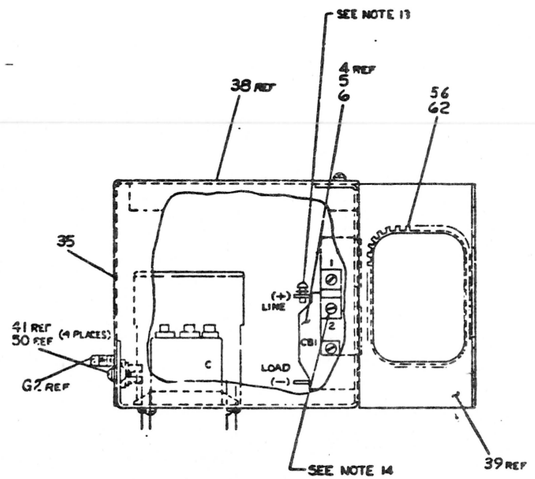

NOTES:

1. ITEM 53 #6 EXT WASHER MUST BE BETWEEN CHASSIS AND MOUNTING TAB OF RECEPTACLE (P1-P6).
2. ~~REMOVE NYLON RIVETS FROM P3-P6~~
3. ~~BLACK WIRE (ITEM 60 OR 61) MUST BE PLACED BETWEEN FILTER (ITEM 12) AND FERRITE CLAMP (ITEM 13) OF FL1.~~
4. ~~REMOVE PAINT UNDER FERRITE CLAMP AROUND STUD (G1) AND CAREFULLY SCRAPE SURFACE WITH CONDUCTIVE OR EASE (ITEM 76). PLACE LATCH, W/ FOOT, EACH WASHER (ITEM 54) ON STUD FIRST, THEN CRIMP LUG (FROM WIRE #5 ASSY) ONTO THE PICTOR (ITEM 15 - (ITEM 33 OF 15)). THEN REPEAT (ITEM 41) THEN G PART LUG (FROM J1 WIRE FROM THIS LUG GOES TO P6 BOARD) AND LAST REPEAT (ITEM 41). SEE DETAIL "K".~~
5. ~~REMOVE ALL PISTONS FROM CUTTERS (ITEMS 12 & 13).~~
6. C1-3 IS THE COMMON(C) SIDE OF C1.
7. ~~RECOMMENDED TORQUE LEVEL FOR VARIOUS HARDWARE SIZES~~
   - ~~THREAD TORQUE~~
   - ~~6-32 10 IN-LBS~~
   - ~~8-32 15 IN-LBS~~
   - ~~10-32 40 IN-LBS~~
8. ~~TO PREVENT STRESS FROM CRIMP ON P6 BOARD USE ITEM 43 (FOAM WASHER) BETWEEN CHASSIS AND PC BOARD.~~
9. USE CABLETIE (ITEM 43) AIR AND USE TIE WRAPS (ITEM 87) AS AN ALTERNATE PART.
10. ~~RING TERMINAL FROM P3 AND P4 WIRE #2 GND (G2) AND APPLY CONDUCTIVE GREASE (ITEM 76).~~
11. POWER CORD TO EXTEND APPROX. .50IN. BEYOND LOCKNUT (ITEM 44) FOR ITEMS 80 & 29. ITEMS 26 & 28 TO REMAIN FLUSH WITH LOCKNUT.
12. ~~RECOMMENDED TORQUE LEVEL FOR LUGS ON K1 (ITEMS 10 & 11) IS 15 IN-LBS.~~
13. REF. WIRE LIST. THESE CONNECTIONS HAVE THREE RING TERMINALS AND REQUIRE (ITEM 82) SCREW 8-32 x 1/4" WITH (ITEM 40) LOCKWASHER.
14. REQUIRED TORQUE LEVELS FOR CERTAIN ELECTRO-MECHANICAL CONNECTIONS.
    - A. 18±2 IN-LBS. FOR TERMINALS ON F1 (ITEMS 12 & 13), THE G LUG BOXES ON K1 (ITEMS 10 & 11) AND NUTS ON GROUND STUD G1.
    - B. 16±2 IN-LBS FOR 8-32 SCREW CONNECTIONS ON OUTLETS P1 THRU P6 (ITEMS 7 & 8).
    - C. 12±2 IN-LBS ON 8-32 SCREW CONNECTIONS ON CIRCUIT BREAKER CONNECTIONS CB1 (ITEMS 4, 5 & 6).
15. USE NO MOUNTING HARDWARE FOR SWITCH.
16. STRAIN RELIEF SPACING: (L)

861 A	1⅝"
861 B	0
861 C	1⅝"
861 F	0

FOR PARTS LIST SEE
A-PL-861-0-0

FIRST USED ON OPTION MODEL	QTY.	DESCRIPTION	P NTE. ITEM NO.
861-PC		PARTS LIST	

DIMENSIONAL TOLERANCE
DIMENSIONS ARE IN INCHES UNLESS OTHERWISE SPECIFIED
FRACTIONS ±1/64 DECIMALS .XX ±.010 .XXX ±.005 ANGLES ±1° SURFACE FINISH 125 MICRO INCHES
THIRD ANGLE PROJECTION
REMOVE BURRS AND BREAK SHARP EDGES
MFG. PART NO. SEE PARTS LIST

	NAME	DATE
DRN.	C SCHMITT	9-7-72
CHK'D.	J KALAGHER	
ENG.	R HERTEN	
PROJ. ENG.	ALLEN	
PROD.	P PAZ	

MFG ASSY NO. 8-00-861-0-0
SCALE 1/1
SHEET OF 6

digital

TITLE: POWER CONTROL 861

SIZE/CODE F | UA | SUBBASE 861-0-0 | REV. U

THIS DRAWING AND SPECIFICATION, EITHER ARE THE PROPERTY OF DIGITAL EQUIPMENT CORPORATION AND MAY NOT BE REPRODUCED OR USED IN WHOLE OR IN PART AS THE BASIS FOR MANUFACTURE OR SALE OF ITEMS WITHOUT WRITTEN PERMISSION. COPYRIGHT © 1972 DIGITAL EQUIPMENT CORPORATION

"THIS DRAWING AND SPECIFICATIONS, HEREIN, ARE THE PROPERTY OF DIGITAL EQUIPMENT CORPORATION AND SHALL NOT BE REPRODUCED OR COPIED OR USED IN WHOLE OR IN PART AS THE BASIS FOR THE MANUFACTURE OR SALE OF ITEMS WITHOUT WRITTEN PERMISSION.
COPYRIGHT © 1977, DIGITAL EQUIPMENT CORPORATION"

WIRE TABLE, 861-A

ITEM NO.	DESCRIPTION AWG	DESCRIPTION COLOR	FROM CONN	FROM POINT	FROM WITH	TO CONN	TO POINT	TO WITH	REMARKS
2	—	—	R1-1		—	K1-4		70,61	1. IN
	—	—	R1-2		—	K1-5		70,61	1. IN
3	14	BLU	K1-B3		*	P6-S2		60	6. IN
↓	↑	↓			*	P4-S2		60	4.25 IN
			K1-B3		*	C1-3B		63	4.5 IN
↓		↓	P6-S1		60	P5-S1		60	4.5 IN
73		BLU	P4-S1		60	P3-S1		60	4.5 IN
72		BRN	K1-B2		*	C1-2B		63	4.5 IN
72		BRN			*	P6-B1		60	6. IN
72		BRN	P6-B2		60	P5-B2		60	3. IN
71		BLK	K1-B1		*	C1-1B		63	3.5 IN
71		BLK			*	P4-B1		60	6. IN
71	↑	BLK	P4-B2		60	P3-B2		60	3. IN
73	14	BLU	CB1-C2		55	P1-S1		60	9. IN
66	12	↓				K1-A3		*	5. IN
73	14	↓	K1-A3		*	P15-2		23,22	3.75 IN
73	14	BLU	P16-2		23,22	K1-A3		*	6.5 IN
65	12	BRN	CB1-B2		55	K1-A2		*	6.75 IN
72	14	BRN				P1-B1		60	10.5 IN
64	12	BLK	CB1-A2		55	K1-A1		*	7.5 IN
71	14	BLK				P2-B1		60	6. IN
71	↓	BLK	K1-A1		*	P15-3		23,22	5.5 IN
72		BRN	K1-A2		*	K1-4		63	4. IN
72	↑	BRN	P16-1		23,21	K1-5		63	7.5 IN
73	14	BLU	P1-S2		60	P2-S1		60	4. IN
66	12	BLU	CB1-C1	SEE NOTE 13	55	F1-N	LOAD	55	5.5 IN
9	—	RED	I1-A		—	CB1-C1	SEE NOTE 13	58	5.75 IN
9	—	RED	I2-A		—	CB1-C1		58	4. IN
9	—	BLK	I1-B		—	CB1-A1		58	3.75 IN
64	12	BLK	F1-PH1	LOAD	55	CB1-A1		55	3. IN
9	—	BLK	I2-B		—	CB1-B1		58	4.75 IN
65	12	BRN	F1-PH2	LOAD	55	CB1-B1		55	5.25 IN
74	14	ORN	P14-1		23,21	T1-1		63	10. IN
74	14	ORN	P14-2		23,21	T1-2		63	10. IN
68	12	GRN/YEL	F1-⏚	LOAD	55	G1	SEE DETAIL H	55	4.75 IN
67	14	GRN/YEL	F17		SOLD	G2		57	7.78 IN
2	—	—	R2-1		70	C1-3A		59	1.1 IN
↓	↓	↓	R3-1		↓			↓	
↑	↑	↑	R2-2		↑	C1-1A		59	1.25 IN
2	—	—	R3-2		70	C1-2A		59	1. IN
26	12	BLK	P9-Y		17	F1-PH1	LINE	55	15. FT
↓	↓	WHT	P9-S		↓	F1-N	↓	55	↓
↑	↑	RED	P9-X		↑	F1-PH2	↑	55	↑
26	12	GRN	P9-G		17	F1-⏚	LINE	55	15. FT

* STRIP WIRE .38 IN

WIRE TABLE, 861-B

ITEM NO.	DESCRIPTION AWG	DESCRIPTION COLOR	FROM CONN	FROM POINT	FROM WITH	TO CONN	TO POINT	TO WITH	REMARKS
3	—	—	R1-1		—	K1-4		70,61	1. IN
	—	—	R1-2		—	K1-5		70,61	1. IN
73	14	BLU	K1-B3		*	P6-S1		60	5.5 IN
↓	↑	↓			*	P4-S1		60	5.5 IN
			K1-B3		*	C1-3B		63	5.5 IN
↓		↓	P6-S2		60	P5-S1		60	4.5 IN
73		BLU	P4-S2		60	P3-S1		↓	4.5 IN
72		BRN	K1-B1		*	P6-B1		↓	6.5 IN
↓		↓			*	P4-B1		60	6.5 IN
			K1-B1		*	C1-1B		63	5.0 IN
			P6-B2		60	P5-B1		60	3. IN
			P4-B2		60	P3-B1		60	3. IN
			K1-A1		*	K1-4		63	4.25 IN
			K1-A1		*	P15-4		23,22	6.IN
↓		↓	CB1-B2		55	P1-B2		60	10. IN
72		BRN				K1-A1		*	7.5 IN
73		BLU	CB1-C2		55	K1-A3		*	5.5 IN
↓		↓				P1-S2		60	8. IN
			K1-A3		*	P16-2		23,21	6. IN
↓		↓	K1-A3		*	P15-2		23,22	4. IN
73	↑	BLU	P1-S1		60	P2-S2		60	3. IN
72	14	BRN	P1-B1		60	P2-B2		60	4.5 IN
9	—	BLK	I1-B		—	CB1-A2		58	4. IN
↓	—	BLK	I2-B		—	CB1-A2		58	4. IN
↓	—	RED	I1-A		—	CB1-B1		58	5. IN
9	—	RED	I2-A		—	CB1-C1		58	5. IN
72	14	BRN	CB1-B1		57	F1-PH1	LOAD	57	3. IN
73	↓	BLU	CB1-C1		57	F1-N	LOAD	57	4.75 IN
74		ORN	P14-1		23,21	T1-1		63	10.1 IN
74		ORN	P14-2		23,21	T1-2		63	10. IN
67	↑	GRN/YEL	F1-⏚	LOAD	57	G1	SEE DETAIL "H"	57	4.75 IN
67	14	GRN/YEL	F17		SOLD	G2		57	7.75 IN
3	—	—	R2-1		70	C1-3A		59	1. IN
	—	—	R2-2		70	C1-1A		59	1. IN
72	14	BRN	P16-1		23,21	K1-5		63	7. IN
80	↓	GRN/YEL	P9-6		18	F1-⏚	LINE	57	15. FT
80		BRN	F9-Y		18	F1-PH1	LINE	57	15. FT
80	14	BLU	F9-X		18	F1-N	LINE	57	15. FT

WIRE TABLE, 861-C

ITEM NO.	DESCRIPTION AWG	DESCRIPTION COLOR	FROM CONN	FROM POINT	FROM WITH	TO CONN	TO POINT	TO WITH	REMARKS
2	—	—	R1-1		—	K1-4		70,61	1. IN
	—	—	R1-2		—	K1-5		70,61	1. IN
73	14	BLU	K1-B3		*	P6-S1		60	4.5 IN
↓	↑	BLU			↓	P4-S1		↓	5.75 IN
72		BRN	K1-B2			P6-B1			6. IN
↓		BRN				P5-B2			7.5 IN
71		BLK	K1-B1		↓	P4-B1		↓	6.0 IN
↓		BLK			*	P3-B2		↓	6.0 IN
73		BLU	P6-S2		60	P5-S1		↓	4.5 IN
73		BLU	P3-S1		60	P4-S2		60	4.5 IN
73		BLU	K1-B3		*	C1-3B		63	4.5 IN
72		BRN	K1-B2		*	C1-2B		63	4.5 IN
71		BLK	K1-B1		*	C1-1B		63	4.5 IN
72		BRN	CB1-B2		55	P1-B2		60	9.5 IN
↓		BRN				K1-A2		*	6.75 IN
72		BRN	K1-4		63	K1-A2		*	4.25 IN
71		BLK	CB1-C2		55	P2-B1		60	9.0 IN
↓		BLK				K1-A1		*	5.75 IN
71		BLK	K1-A1		*	P15-3		23,22	5.5 IN
73		BLU	CB1-A2		55	P1-S2		60	7.5 IN
↓		↓				K1-A3		*	7. IN
↓		↓	P1-S1		60	P2-S2		60	3. IN
↓		↓	P15-2		22,33	K1-A3		*	3.75 IN
73		BLU	P16-2		23,21	K1-A3		*	6.5 IN
72		BRN	P16-1		↓	K1-5		63	6.75 IN
74		ORN	P14-1		↓	T1-1		63	10. IN
74	14	ORN	P14-2		23 21	T1-2		63	10. IN
2	—	—	R2-1		70	C1-3A		59	1. IN
↓	—	—	R3-1		↓			↓	
↑	—	—	R2-2		↑	C1-1A		59	1.25 IN
2	—	—	R3-2		70	C1-2A		59	1. IN
68	12	GRN/YEL	F1-⏚	LOAD	55	G1	SEE DETAIL "H"	55	4.75 IN
67	14	GRN/YEL	F17		SOLDER	G2		57	7.75 IN
65	12	BRN	CB1-B1	SEE NOTE 13	55	F1-PH1	LOAD	55	3. IN
64	12	BLK	CB1-C1		55	F1-PH1	LOAD	55	3.25 IN
9	—	RED	I1-A			CB1-B1	SEE NOTE 13	57	4.25 IN
↓	—	RED	I2-A			CB1-B1			4.75 IN
↓	—	BLK	I1-B			CB1-A1			3.00 IN
9	—	BLK	I2-B			CB1-A1			5.75 IN
66	12	BLU	CB1-A1	SEE NOTE 13	55	F1-N	LOAD	55	4.5 IN
28	↓	GRN	P9-G		19	F1-⏚	LINE	55	15. FT
28	↓	BLK	P9-B		19	F1-PH1	LINE	55	15. FT
28	12	WHT	P9-S		19	F1-N	LINE	55	15. FT

WIRE TABLE, BF1-F

ITEM NO.	DESCRIPTION AWG	DESCRIPTION COLOR	FROM CONN	FROM POINT	FROM WITH	TO CONN	TO POINT	TO WITH	REMARKS
2	—	—	R1-1		—	K1-4		70,61	1. IN
	—	—	R1-2		—	K1-5		70,61	1. IN
73	14	BLU	K1-B3		*	P6-S1		60	5.25 IN
73	↑	BLU			↓	P4-S1		↓	1. IN
72		BRN	K1-B2			P6-B2			5.25 IN
72		BRN				P5-B2			5.25 IN
71		BLK	K1-B1			P4-B1			6.25 IN
71		BLK				P3-B2		60	6.25 IN
73		BLU	K1-B3			C1-3B		63	3.5 IN
72		BRN	K1-B2			C1-2B		63	3.5 IN
71	14	BLK	K1-B1		*	C1-1B		63	3.5 IN
2	—	—	R2-2		70	C1-1A		59	1. IN
	—	—	R2-1			C1-3A		59	1. IN
2	—	—	R3-1						1. IN
2	—	—	R3-2		70	C1-2A		59	1.25 IN
73	14	BLU	K1-A3		*	P15-A		23,22	4.25 IN
↓	↓	↓	K1-A3		*	P16-2		23,21	5.75 IN
			CB1-A2		55	K1-A3		*	6.75 IN
73		BLU				P1-S2		60	8. IN
72		BRN	K1-A2		*	K1-4		63	4.75 IN
↓		↓	CB1-B2		55	K1-A2		*	6.5 IN
						P1-B2		60	8.25 IN
72		BRN	K1-5		63	P16-1		23,21	6.75 IN
71		BLK	K1-A1		*	P15-3		23,22	6. IN
71		BLK	CB1-C2		55	P2-B1		60	8. IN
71		BLK				K1-A1		*	7. IN
73	14	BLU	P1-S1		60	P2-S2		60	3. IN
9	—	BLK	I1-B		—	CB1-C1		58	4.5 IN
↓	—	BLK	I2-B		—	CB1-B1		58	4.5 IN
↓	—	RED	I1-A		—	CB1-A1	SEE NOTE 13	58	3.5 IN
9	—	RED	I2-A		—	CB1-A1		58	4.5 IN
73	14	BLU	CB1-A1	SEE NOTE 13	57	F1-N	LOAD	57	4.5 IN
71	↓	BLK	CB1-C1		57	CB1-B1		55	3. IN
71		BLK	F1-PH1	LOAD		CB1-B1			4.5 IN
67		GRN/YEL	F1-⏚	LOAD	57	G1	SEE DETAIL H	57	4.75 IN
67		GRN/YEL	P17		SOLD	G2		57	7.75 IN
74		ORN	P14-1		23,22	T1-1		63	10. IN
74		ORN	P14-2		23,21	T1-2		63	10. IN
73		BLU	P3-S1		60	P4-S2		60	4.5 IN
73	14	BLU	P5-S1		60	P6-S2		60	4.5 IN
29	16	GRN	P9-6		—	F1-⏚	LINE	—	9. FT
29	16	BLK	P9-X		—	F1-PH1	LINE	57	9. FT
29	16	WHT	P9-Y		—	F1-N	LINE	57	9. FT

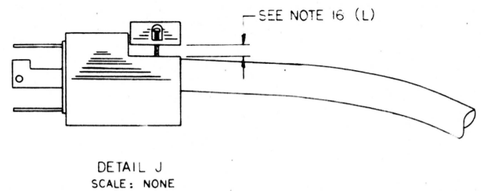

DETAIL J
SCALE: NONE

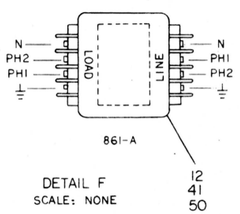

DETAIL F
SCALE: NONE

TO LINE CORD

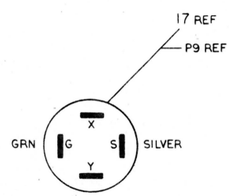

SECTION C-C
861-A
SCALE: NONE

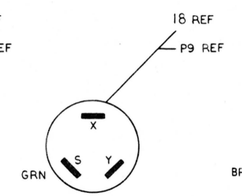

SECTION C-C
861-B
SCALE: NONE

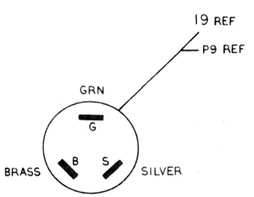

SECTION C-C
861-C
SCALE: NONE

REAR VIEW

REVISIONS CHK	CHANGE NO.	REV.

TITLE	SIZE/CODE	NUMBER	REV.
POWER CONTROL,861	E UA	861-0-0	U
SCALE 1/1 SHEET 2 OF 2	DIST.		

NOTES:

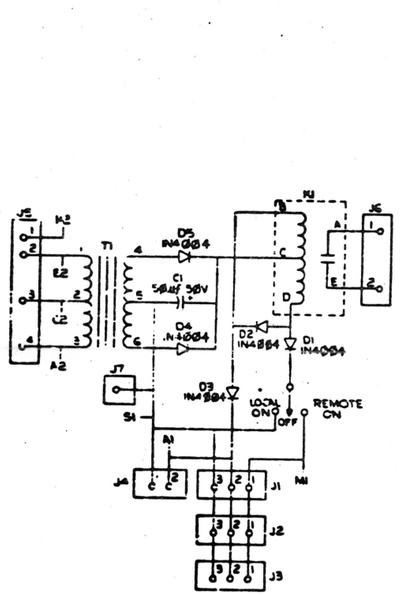

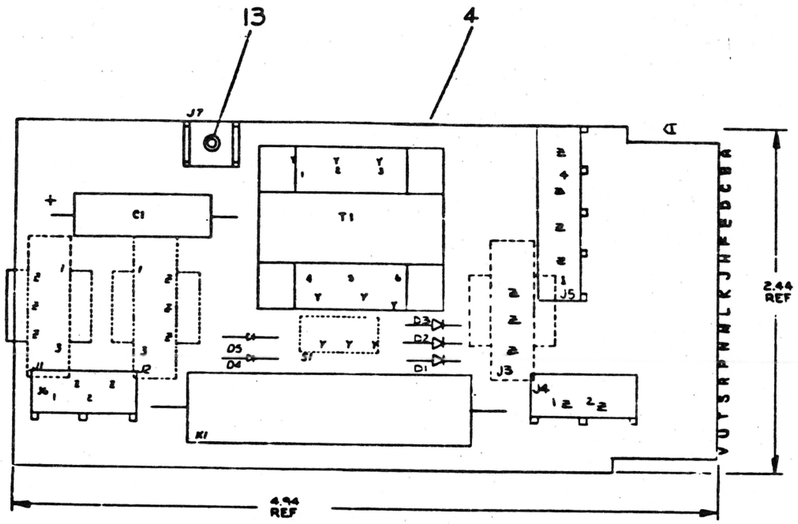

REF				
REF		X-Y COORDINATE HOLE LOCATION	10-5411522-0-4	1
REF		ASSY/DRILLING HOLE LAYOUT	D-AW-5411522-0-5	2
REF		MODULE ECO HISTORY	B-186-5411522-0-6	3
1		ETCHED CIRCUIT BOARD	50111521	4
1	K1	RELAY, REED, 48 V COIL, 2.5 A CONT.	12122647-00	5
1	T1	TRANSFORMER MMC 5415	16123422-00	6
1	C1	CAP 50 MFD 50V TANT	10000800-00	7
5	D1-D5	DIODE IN4004	1105716-00	8
1	S1	SWITCH	12111800-00	9
3	J1-J3	HOUSING, SOCKET	12093500-03	10
1	J5	CONN, UNIVERSAL, 4 PIN HEADER	12122797-01	11
2	J4,J6	CONN, UNIVERSAL, 2 PIN HEADER	12122797-00	12
1		EYELET	9006732-00	13
9		TERMINAL, SOCKET CONTACT	12094560-01	14
1	J7	TERMINAL, SOLDERLESS	9007115-00	15

IC TYPE	GND	+5V
GND AND 5V ARE USUALLY PIN 7 AND 14 RESPECTIVELY EXCEPTIONS ARE STATED ABOVE		

IC PIN LOCATIONS

QTY	REF DESIGNATION	DESCRIPTION	PART NO	ITEM NO

PARTS LIST

FIRST USED ON OPTION MODEL: 861-D / 861-E

ETCH BOARD REV: C

REV	REVISIONS	CHG	CHANGE NO	DATE
B			5411522-00002	11/77

DEC NO	EIA NO	DEC NO	EIA NO

SEMICONDUCTOR CONVERSION CHART

DRN E.N. Mc — DATE 2/14/75
CHK W.F. KRS — DATE 2/14/75
ENG — DATE
PROJ ENG — DATE 2/18/75
MOD — DATE 2/18/75

NEXT HIGHER ASSY: E-UA-861-D-0

SCALE: NONE
SHEET: 1 OF 1

digital EQUIPMENT CORPORATION

TITLE: PILOT CONTROL

SIZE: D | CODE: DCS | NUMBER: 5411522-0-1 | REV: B

DST

DCS5411522-0-1 B

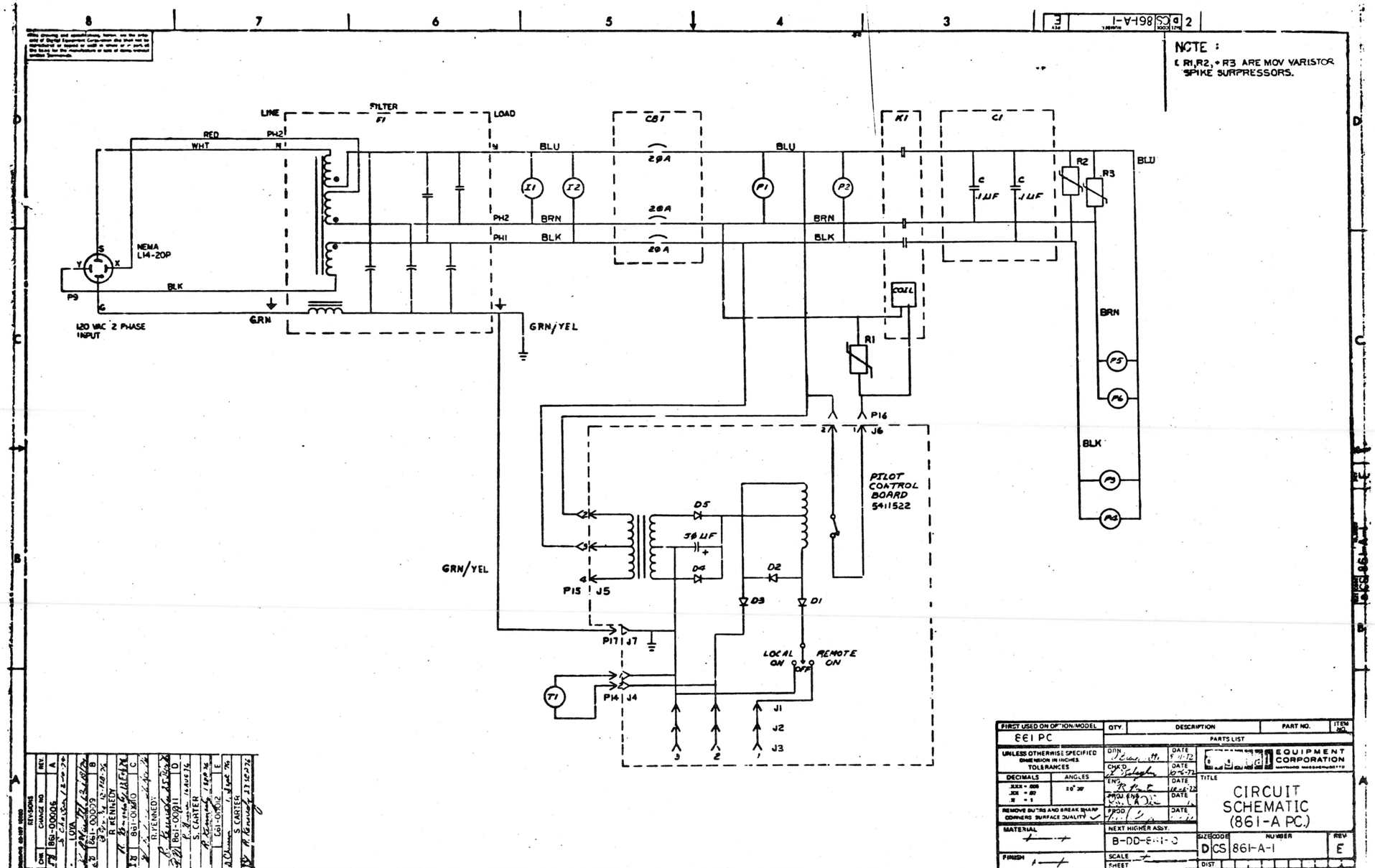
NOTE :
R1,R2, + R3 ARE MOV VARISTOR SPIKE SURPRESSORS.
LINE
FILTER
F1
LOAD
RED
WHT
PH2
N
BLU
CB1
20A
K1
C1
.1µF
R2
R3
BLU
PH2
BRN
PH1
BLK
NEMA
L14-20P
P9
120 VAC 2 PHASE INPUT
GRN
GRN/YEL
COIL
R1
P16
J6
PILOT CONTROL BOARD 5411522
D5
50µF
D4
D2
D3
D1
P15
J5
P17
J7
LOCAL ON
REMOTE ON
OFF
T1
P14
J4
J1
J2
J3
FIRST USED ON OPTION/MODEL
861 PC
QTY.
DESCRIPTION
PART NO.
ITEM NO.
PARTS LIST
UNLESS OTHERWISE SPECIFIED DIMENSION IN INCHES
TOLERANCES
DECIMALS
ANGLES
REMOVE BURRS AND BREAK SHARP CORNERS SURFACE QUALITY
MATERIAL
FINISH
NEXT HIGHER ASSY.
B-DD-861-0
SCALE
SHEET
DRN
CHK'D
ENG
PROJ ENG
PROD
DATE
EQUIPMENT CORPORATION
TITLE
CIRCUIT SCHEMATIC (861-A PC.)
SIZE
CODE
NUMBER
REV
D
CS
861-A-1
E
DIST
REVISIONS
CHG
CHANGE NO.
REV.
861-00006
A
LOYA
861-00009
B
R. KENNEDY
861-00010
C
R. KENNEDY
861-00011
D
S. CARTER
861-00012
E
S. CARTER

This drawing and specifications, herein are the property of Digital Equipment Corporation and shall not be reproduced or copied or used in whole or in part as the basis for manufacture or sale of items without written permission.

NOTE :
1. R1+R2 ARE MOV VARISTOR SPIKE SURPRESSORS.

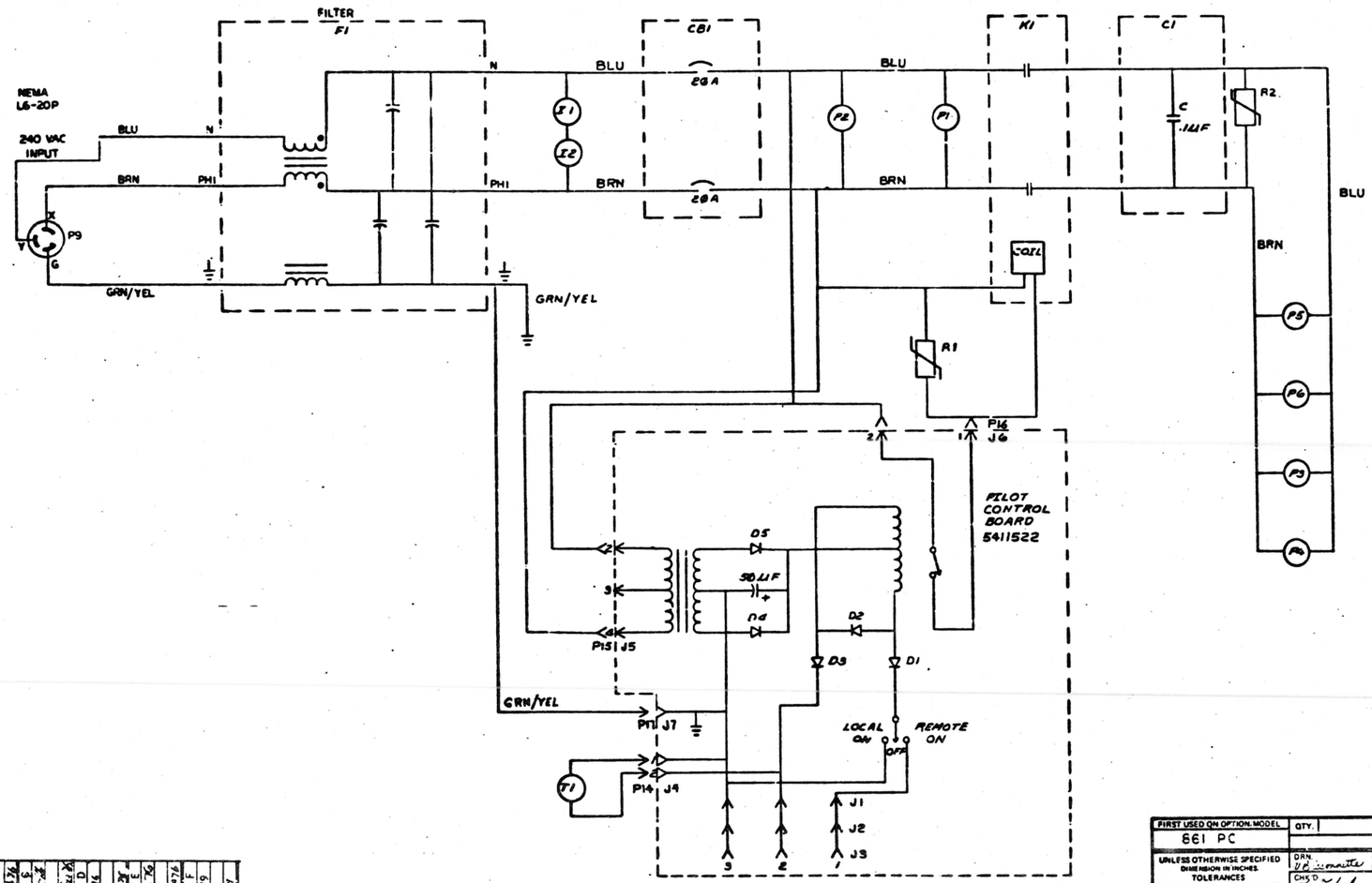

REVISIONS			
CHK	CHANGE NO.	REV	
[illegible]	861-00008	A	[illegible]
[illegible]	861-00009	B	[illegible]
[illegible]	861-00010	C	[illegible]
[illegible]	861-00011	D	[illegible]
[illegible]	861-00012	E	[illegible]
[illegible]	861-MI-016	F	[illegible]

FIRST USED ON OPTION/MODEL	QTY.	DESCRIPTION	PART NO.	ITEM NO.
861 PC		PARTS LIST		

UNLESS OTHERWISE SPECIFIED DIMENSION IN INCHES
TOLERANCES
DECIMALS: XXX = ±.005, .XX = ±.01, .X = ±.1
ANGLES: ±0° 30'
REMOVE BURRS AND BREAK SHARP CORNERS SURFACE QUALITY ✓
MATERIAL
FINISH

DRN. [illegible] DATE 8-11-78
CHK'D [illegible] DATE 11-6-78
ENG. [illegible] DATE 12-6-78
MFG. ENG. [illegible] DATE 12-6-78
PROD. [illegible] DATE 12-6-78
NEXT HIGHER ASSY. B-DD-U61-0
SCALE
SHEET 1 OF 1

EQUIPMENT CORPORATION
MAYNARD, MASSACHUSETTS

TITLE
CIRCUIT SCHEMATIC (861-B P.C.)

SIZE D | CODE CS | NUMBER 861-B-1 | REV. F
DIST.

NOTE :
1. R1, R2 + R3 ARE MOV VARISTOR SPIKE SUPPRESSORS.

LINE
FILTER F1
LOAD
N
BLU
CB1
30A
20A
20A
BLU
K1
C1
C .1UF
C .1UF
R2
R3
BLU
I2
I1
T1
P2
BRN
BLK
PHI
WHT
NEMA L5-30P
120 VAC INPUT
G
B
S
BLK
PHI
GRN
BRN
BLK
GRN/YEL
R1
P5
P6
BLK
P3
P4
P16 J6
PILOT CONTROL BOARD 5411522
D5
D4
D2
D3
D1
30UF
P15 J5
GRN/YEL
P17 J7
LOCAL ON
REMOTE ON
OFF
T1
P14 J4
J1
J2
J3
3
2
1

REVISIONS				
DWN	CHANGE NO	REV		
KB	861-00006	A		

This drawing and specifications, herein, are the property of Digital Equipment Corporation and shall not be reproduced or copied or used in whole or in part as the basis for the manufacture or sale of items without written permission.

DIGITAL EQUIPMENT CORPORATION
MAYNARD MASSACHUSETTS

PACKAGING INSTRUCTION	REV: A / B	DATE: 4/73 / 8/78
TITLE INSTR PKG POWER CONTROL 861, ATR 16		

MATERIAL REQUIREMENTS

QUANTITY	PURCHASE SPECIFICATIONS NO.	DESCRIPTION
1	9905229	Full Overlap Carton
2	9005228	Expanded Polystyrene Foam Insert
A/R		3-inch wide Glasflex Tape

PACKAGING INSTRUCTIONS

STEP	PROCEDURE
1.	Set up the Full Overlap Carton (9905229) using one strip of tape across the bottom and extending up the sides approximately three inches. See Figure 1.
2.	Place one expanded Polystyrene Foam Insert (9905228) in each end of the carton with the slots in the foam facing inward.
3.	Place the 861 or ATR 16 Power Control in the carton with the ears of the upright sliding into the slots in the foam.
4.	Coil the Power Cord so that it fits into the cavity in the rear of the Power Control.
5.	Close and seal the carton with one piece of tape across the top of the carton and extending down the sides approximately three inches.

ENG	APPD	SIZE	CODE	NUMBER	REV
[signature]	[signature] 21/4/78	A	SP	3700083-0-0	B

DEC 0-(551)-1031-1-R671
DRA - 129

SHEET 1 OF 2

This drawing and specifications, herein, are the property of Digital Equipment Corporation and shall not be reproduced or copied or used in whole or in part as the basis for the manufacture or sale of items without written permission.

PACKAGING INSTRUCTION	REV: A / B	DATE: 4/73 / 8/78
TITLE INSTR PKG POWER CONTROL 861, ATR 16		

FIGURE 1

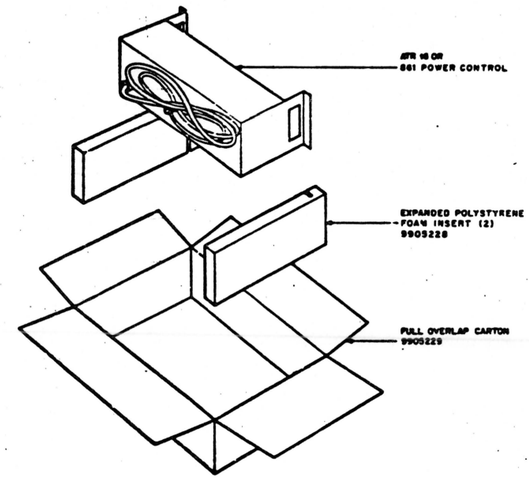

NOTE
Make changes to the "C" size original only and rephotograph.

ENG.	APPD.	SIZE	CODE	NUMBER	REV
[signature] 12/4/78	[signature] 12/4/78	A	SP	3700083-0-0	B

SHEET 2 OF 2

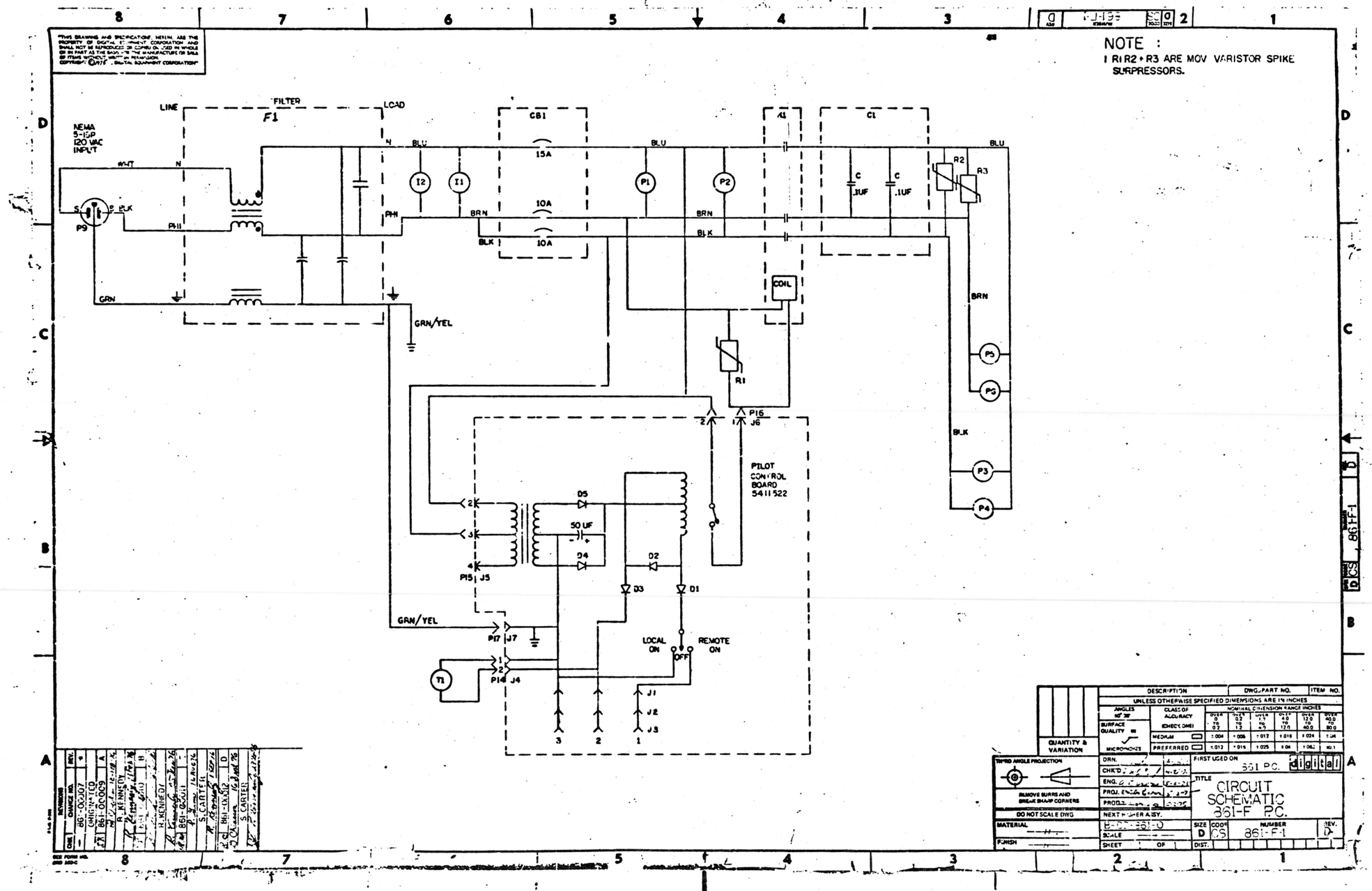
NOTE :
1 R1 R2 + R3 ARE MOV VARISTOR SPIKE SURPRESSORS.
NEMA 5-15P 120 VAC INPUT
LINE
FILTER
F1
LOAD
CB1
15A
10A
10A
K1
C1
.1UF
.1UF
R2
R3
R1
COIL
P1
P2
P3
P4
P5
P6
P9
I1
I2
WHT
BLK
GRN
BLU
BRN
GRN/YEL
PILOT CONTROL BOARD 5411522
D5
50 UF
D4
D2
D3
D1
P15 J5
P16 J6
P17 J7
P14 J4
T1
LOCAL ON
REMOTE ON
OFF
J1
J2
J3
DESCRIPTION
DWG/PART NO.
ITEM NO.
UNLESS OTHERWISE SPECIFIED DIMENSIONS ARE IN INCHES
QUANTITY & VARIATION
THIRD ANGLE PROJECTION
REMOVE BURRS AND BREAK SHARP CORNERS
DO NOT SCALE DWG
MATERIAL
FINISH
FIRST USED ON
861 P.C.
digital
TITLE
CIRCUIT SCHEMATIC 861-F P.C.
NEXT HIGHER ASSY.
SIZE D
CODE CS
NUMBER 861-F-1
REV. D
SHEET
OF
DIST.
861-F-1

"THE MATERIAL HEREIN IS FOR INFORMATION PURPOSES ONLY AND IS SUBJECT TO CHANGE WITHOUT NOTICE. DIGITAL EQUIPMENT CORPORATION ASSUMES NO RESPONSIBILITY FOR ANY ERRORS WHICH MAY APPEAR HEREIN."

FIELD MAINTENANCE PRINT SET

"THIS DRAWING AND SPECIFICATIONS, HEREIN, ARE THE PROPERTY OF DIGITAL EQUIPMENT CORPORATION AND SHALL NOT BE REPRODUCED OR COPIED OR USED IN WHOLE OR IN PART AS THE BASIS FOR THE MANUFACTURE OR SALE OF ITEMS WITHOUT WRITTEN PERMISSION. COPYRIGHT © 1976 , DIGITAL EQUIPMENT CORPORATION."

TABLE OF CONTENTS

B-TC-DZ11-Ø-6	DZ11 PRINT SET
B-DD-M7819-Ø	8 LINE EIA ASYNCHRONOUS MUX
B-PL-M7819-Ø-Ø	8 LINE EIA ASYNCHRONOUS MUX
D-UA-M7819-Ø-Ø	8 LINE EIA ASYNCHRONOUS MUX
B-BD-M7819-Ø-8	8 LINE EIA ASYNCHRONOUS MUX
D-CS-M7819-Ø-1	8 LINE EIA ASYNCHRONOUS MUX
B-DD-H317-Ø	H317 CABLE BOX ASSY
D-UA-H317-Ø-Ø	H317 CABLE BOX ASSY
B-DD-5411928-0	DZ11 EIA DISTRIBUTION PANEL
B-PL-5411928-0-0	DZ11 EIA DISTRIBUTION PANEL
E-UA-5411928-0-0	PANEL, EIA DISTRIBUTION
D-CS-5411928-0-1	DZ11 EIA DIS. PANEL
D-IA-BCØ5W-Ø-Ø	5Ø CONDUCTOR SIGNAL CABLE (BCØ5W)
B-BD-DZ11-Ø-8	SYSTEM CONNECT DIAGRAM
D-UA-DZ11-Ø-Ø	UNIT ASSY DZ11
A-PL-DZ11-Ø-Ø	EIA ASYNCHRONOUS MUX
B-DD-DZ11-Ø	EIA ASYNCHRONOUS MUX
D-UA-H3271-0-0	CONNECTOR, TURN AROUND (EIA)
D-CS-H3271-0-1	CONNECTOR, TURN AROUND (EIA)
D-CS-H325-0-1	H325 TEST CONNECTOR
D-IA-BCØ3M-0-0	NULL MODEM CABLE
D-IA-BCØ3P-0-0	NULL MODEM CABLE
D-UA-BCØ6L-0-0	MIRROR IMAGE CABLE (50 POS)
A-PL-DZ11-0-5	SHIPPING LIST DZ11
E-AD-7016469-0-0	EIA PANEL WITH FILTERS ASSY

UNIT VARIATIONS COVERED BY THIS PRINT SET
DZ11-A
DZ11-E
DZ11-B
DZ11-AA
DZ11-BA
DZ11-EA

DZ11-A,B,E (EIA)

Field Maintenance Print Set

Digital Equipment Corporation

PRINT SET ORDER NUMBER MPØØ132

REVISIONS			
REV.	A	B	C
CHG. NO.	DZ11-3	DZ11-MKØØ5	DZ11-MK7
DATE	8-77	5-78	5-79

USED ON OPTION/MODEL	
DZ11	

SHEET 1 OF 1

DRN.	K. DAVIS	DATE 5/5/76
CHK'D	P. Cappa[illegible]	DATE 5-19-76
PROJ. ENG.	[illegible]	DATE
FIELD SERV.	[illegible]	DATE 5-19-76

digital

TITLE: DZ11-A,B,E FIELD MAINTENANCE PRINT SET

SIZE	CODE	NUMBER	REV.
B	TC	DZ11-Ø-6	C

DIST.

EN-01124-16-N675-(327)

DRB 124

SIZE	CODE	NUMBER	REV.
B	DD	M7819-0	L

DRAWING NO.	NO. OF SHTS	PART NO.	DESCRIPTION	REVISIONS									
D-UA-M7819-0-0	5		8 LINE EIA ASYNCHRONOUS MUX	B	B	D	E	F	F	H	J	K	L
K-PL-M7819-0-0	4		8 LINE EIA ASYNCHRONOUS MUX	B	C	D	E	F	F	H	J	K	L
D-CS-M7819-0-1	15		8 LINE EIA ASYNCHRONOUS MUX	B	C	D	E	F	F	H	J	K	L
D-AH-M7819-0-5	1		8 LINE EIA ASYNCHRONOUS MUX	B	B	C	D	E	E	H	E	F	F
		5011820	ETCHED BOARD	C	C	C	D	E	E	E	E	F	F
M7819-0-L			P.C. DESIGN DATA BASE	REF	-	-	-	-	-	-	-	-	-
M7819-0-PL			INSERTION P/L DATA BASE	REF	-	-	-	-	-	-	-	-	-
B-MH-M7819-0-6	2		MODULE ECO HISTORY	REF	-	-	-	E	E	H	J	K	L
D-BD-M7819-0-8	1		M7819 BLOCK DIAGRAM	A	A	A	A	A	A	A	A	A	A
A-SP-M7819-0	3		SPECIFICATION	-	-	-	-	-	-	-	*	A	A

NOTES:

REVISIONS									
REV.	B	C	D	E	F	H	J	K	L
CHG NO.	00001	00002	00003	00004	00005	MK006	MK007	MK009	MK010
DATE	9 JUN 76	8-76	14 OCT 76	[illegible]	[illegible]	[illegible]	[illegible]	[illegible]	[illegible]

"THIS DRAWING AND SPECIFICATIONS, HEREIN, ARE THE PROPERTY OF DIGITAL EQUIPMENT CORPORATION AND SHALL NOT BE REPRODUCED OR COPIED OR USED IN WHOLE OR IN PART AS THE BASIS FOR THE MANUFACTURE OR SALE OF ITEMS WITHOUT WRITTEN PERMISSION.
COPYRIGHT ©1976, DIGITAL EQUIPMENT CORPORATION"

digital

USED ON OPTION/MODEL

DRN	R. Koppenal	3-2-76
CHK'D	R. Koppenal	3-2-76
ENG	[illegible]	3-2-76
PROD.	R. Wall	3-2-76

TITLE 8 LINE EIA ASYNCHRONOUS MUX

SIZE	CODE	NUMBER	REV.
B	DD	M7819-0	L

SHEET 1 OF 2

MK

DRB 126 EN-01149-16-N176(325)

SIZE	CODE	NUMBER	REV
B	DD	M7819-0	L

DRAWING NO.	NO. OF SHTS.	PART NO.	DESCRIPTION	REVISIONS
D-UA-M7819-0-0	5		8LINE EIA ASYNCHRONOUS MUX	DI EI
B-PL-M7819-0-0	4		8LINE EIA ASYNCHRONOUS MUX	DI EI
D-CS-M7819-0-1	15		8LINE EIA ASYNCHRONOUS MUX	DI EI
D-AH-M7819-0-5	1		8LINE EIA ASYNCHRONOUS MUX	D E
		5011820	ETCHED BOARD	D E
M7819-0-L			PC DESIGN DATA BASE	REF —
M7819-0-PL			INSERTION P/L DATA BASE	REF —
B-MH-M7819-0-6	2		MODULE ECO HISTORY	F F
D-BD-M7819-0-8			M7819 BLOCK DIAGRAM	A A

NOTES:

REVISIONS			
REV.	F	F	
CHG NO.	MK005	MK005	
DATE			

"THIS DRAWING AND SPECIFICATIONS, HEREIN, ARE THE PROPERTY OF DIGITAL EQUIPMENT CORPORATION AND SHALL NOT BE REPRODUCED OR COPIED OR USED IN WHOLE OR IN PART AS THE BASIS FOR THE MANUFACTURE OR SALE OF ITEMS WITHOUT WRITTEN PERMISSION.

COPYRIGHT© 1979 DIGITAL EQUIPMENT CORPORATION

digital

USED ON OPTION/MODEL

DRN.	R. KOPPENAL	3-2-76
CHK'D	R. KOPPENAL	3-2-76
ENG.	R. CORMIER	3-2-76
PROD.	R. WALL	3-2-76

TITLE 8 LINE EIA ASYNCHRONOUS MUX

SIZE	CODE	NUMBER	REV.
B	DD	M7819-0	L

SHEET 2 OF 2

DRB 126

MK

AUTOMATED BY PRTLST,3M(41)

P A R T S L I S T

LINE	ITEM	DOCUMENT NUMBER	PART NUMBER		DESCRIPTION	QTY PER VARIATION 00	YA	YB	YC	REFERENCE DESIGNATOR
1	1	D-MD-5011820-0-0	5011820-00		M7819	1	1	1	1	
2	2		1000025-00		560.0 MMF 100V 5%200PPM DM15S	2	2	2	2	C53,C92
3	3		1000018-00		120.0 MMF 100V 5%200PPM DM15S	2	2	2	2	C96,C99
4	4		1000024-00		470.0 MMF 100V 5%200PPM DM15S	26	26	26	26	C93,C100-C122,C131,C132
5	5		1000042-00		1000.0 MMF 100V 5%200PPM DM15S	1	1	1	1	C98
6	6		1001610-00		.01 MFD 50V -20+80 Z5U AXIAL	91	91	91	91	C1-C52,C54-C91,C130
7	7		1000010-00		39.0 MMF 100V 5%200PPM DM15S	1	1	1	1	C97
8	8		1005306-00		6.8MFD 35V 10% S.TANT	6	6	6	6	C123-C126,C128,C129
9	9		1000021-00		220.0 MMF 100V 5%200PPM DM15S	1	1	1	1	C95
10	10		1000023-00		330.0 MMF 100V 5%200PPM DM15S	1	1	1	1	C94
11	11		1105796-00		1N 4004 PIV=400 I= 1A D041 SP	2	2	2	2	D1,D5
12	12		1109943-00		1N 4733A VZ= 5.1 5% 1W Y	2	2	2	2	D2,D6
13	13		1103340-00		1N 4736A VZ= 6.8 5% 1W Y	2	2	2	2	D3,D7
14	14		1101938-00		1N 4370A VZ= 2.4 5% .40W	2	2	2	2	D4,D8
15	15		1905547-00		7474 FF-D DUAL,EDGE TRIGG	1	1	1	1	E96
16	16		1909705-00	DEC	8881 NAND GATE-QUAD 2IN O	1	1	1	1	E72
17	17		1910091-00	DEC	7437 AND GATE-QUAD 2IN,BU	2	2	2	2	E24,E68
18	18		1910322-00	DEC	1488L DRIVER,LINE,QUAD,EI	4	4	4	4	E7-E10
19	19		1910323-00	DEC	1489L RECEIVER,LINE,QUAD,	6	6	6	6	E1-E6
20	20		1910454-00	DEC	9318 ENCODER, 8 INPUT PRI	1	1	1	1	E82
21	21		2114137-50		UART MOS,REF:19-10459-01 OR 21-1	8	8	8	8	E44-E51
22	22		1910951-00		9602 ONE SHOT-DUAL	2	2	2	2	E78,E106
23	23		1911116-00	DEC	8837 RECEIVER,BUS,HEX,UN	1	1	1	1	E70
24	24		1911579-00		8641 TRANSCEIVER,BUS,QUA	4	4	4	4	E28,E29,E36,E37
25	25		1912083-00	DEC	8647 UNIBUS INTERRUPT CON	2	2	2	2	E89,E90
26	26		1912395-00	DM	8136 COMPARATOR-6BIT UNIF	3	3	3	3	E61,E71,E80
27	27		1912799-00		LS00 NAND-GATE-QUAD 2IN,P	4	4	4	4	E23,E73,E76,E99
28	28		1912801-00		LS02 NOR-GATE-QUAD 2IN	1	1	1	1	E108
29	29		1912803-00		LS04 INVERTER GATE-HEX 1I	5	5	5	5	E12-E14,E86,E101
30	30		1912805-00		LS08 AND GATE-QUAD 2IN,PO	4	4	4	4	E63,E65,E87,E107

REVISION HISTORY			
ENG	ECO NUMBER	REV	
RH	M7819-MK010	L	

SECTION.VARIATION INDEX
[A] 00,YA,YB,YC
[B] YD
[C]
[D]
[E]
[F]
[H]
[J]
[K]
[L]
[M]
[N]

BASIC PART NO: M7819

SECTION A OF B

DRN: ANDY KRAWIECKI	DATE: 18-MAY-79	DBP
CHK'D: KENT GLEEZEN	DATE: 18-MAY-78	TITLE: PARTS LIST
DES.ENG: BOB CORMIER	DATE: 18-MAY-78	8 LINE EIA ASYNCHRONOUS MUX
RESP.ENG.: RAY HARRINGTON (Ray Harrington)	DATE: 21-MAR-80 (14 April 80)	DOCUMENT NUMBER
MFG.ENG.: BOB MULLIN	DATE: 21-MAR-80	SIZE: K / CODE: PL / NUMBER: M7819-0-0 / REV: L
ASSEMBLY NUMBER: D-UA-M7819-0-0	TOP DOCUMENT NUMBER: B-DD-M7819-0-0	FILE NAME: M7819.PLS / EDIT #: 15

"THIS DRAWING AND SPECIFICATIONS HEREIN, ARE THE PROPERTY OF DIGITAL EQUIPMENT CORPORATION AND SHALL NOT BE REPRODUCED OR COPIED OR USED IN WHOLE OR IN PART AS THE BASIS FOR THE MANUFACTURE OR SALE OF ITEMS WITHOUT WRITTEN PERMISSION.
COPYRIGHT (C) 1980, DIGITAL EQUIPMENT CORPORATION "

AUTOMATED BY PRTLST,3M(41)

P A R T S L I S T

SHEET A2 OF A2

LINE	ITEM	DOCUMENT NUMBER	PART NUMBER	DESCRIPTION	QTY PER VARIATION 00	YA	YB	YC	REFERENCE DESIGNATOR
31	31		1912807-00	LS10 NAND GATE-TRIPLE 3IN	1	1	1	1	E97
32	32		1912811-00	LS21 AND GATE-DUAL 4IN,PO	1	1	1	1	E69
33	33		1912816-00	LS32 OR GATE-QUAD 2IN,POS	2	2	2	2	E84,E100
34	34		1912824-00	LS74 FF-D DUAL,EDGE TRIGG	4	4	4	4	E77,E85,E88,E109
35	35		1912830-00	LS90 COUNTER,ASYNCH UP,DE	1	1	1	1	E66
36	36		1912842-00	LS138 DECODER-THREE INPUT,	2	2	2	2	E74,E75
37	37		1912844-00	LS151 MUX 1 OF 8 & DATA	2	2	2	2	E91,E92
38	38		1912845-00	LS153 MUX 1 OF 4 (DUAL)	8	8	8	8	E30-E33,E38-E41
39	39		1912846-00	LS155 DECODER,2 OF 4(DUAL)	3	3	3	3	E83,E94,E95
40	40		1912847-00	LS157 MUX 1 OF 2(QUAD)	5	5	5	5	E19-E22,E102
41	41		1912853-00	LS175 FF-D QUAD	12	12	12	12	E15-E18,E26,E27,E34,E35,E42,E43,
								CONT	E93,E104
42	42		1912860-00	LS259 LATCH 8BIT	3	3	3	3	E62,E64,E103
43	43		2111188-00	3341 64X4 FIFO MEMORY	4	4	4	4	E57-E60
44	44		2112623-00	DUAL BAUD RATE GEN/PROG DIVIDER,	4	4	4	4	E53-E56
45	45		1912854-00	LS193 COUNTER,SYNCHR,4BIT,	2	2	2	2	E79,E105
46	46		1300202-00	47.0 .25 W 5.0 % CC	5	5	5	5	R1-R5
47	47		1300229-00	100.0 .25 W 5.0 % CC	4	4	4	4	R13,R15,R67,R68
48	48		1300309-00	390.0 .25 W 5.0 % CC	1	1	1	1	R30
49	49		1300365-00	1.0 K .25 W 5.0 % CC	5	5	5	5	R11,R12,R14,R27,R61
50	50		1300479-00	10.0 K .25 W 5.0 % CC	17	17	17	17	R16-R25,R31-R36,R62
51	51	BLANK		*** THIS ITEM IS NOT USED ***	-	-	-	-	
52	52		1301322-00	180.0 .25 W 5.0 % CC	4	4	4	4	R26,R28,R29,R63
53	53		1301874-00	5.60 K .25 W 5.0 % CC	2	2	2	2	R64,R65
54	54		1302177-00	47.0 K .25 W 5.0 % CC	25	25	25	25	R66,R37-R60
55	55		1209838-00	SOCKET 16PIN	1	1	1	1	XE52
56	56		1209941-03	HEADER RT ANGLE LEFT L	1	1	1	1	
57	57		1209941-04	HEADER RT ANGLE,RIGHT	1	1	1	1	
58	58		1209941-07	HEADER,100 50POS RT ANGLE	1	1	1	1	J1
59	59		1210711-02	HANDLE,MODULE,HEX	1	1	1	1	
60	60		1211164-04	SW,DIP 1P 1A 8POS	1	1	1	1	E11
61	61		1211164-06	SW,DIP 1P 1A 10POS	1	1	1	1	E81
62	62		5408778-00	PLUG PRIORITY	1	1	1	1	E52
63	63		9006735-00	EYELET, FUNNEL FLANGE, .059 OD X	2	2	2	2	
64	64		9000024-01	EYELET, ROLLED FLANGE, .121 OD X	12	12	12	12	
65	65		9009185-00	JUMPER, WIRE, INSULATED, BLACK B	1	1	1	1	W1
66	66		1811660-02	OSCILLATOR, XTAL 5.0688 MHZ	1	-	-	-	E67
67	67		1811660-08	OSCILLATOR, XTAL 2.619 MHZ	-	1	-	-	E67
68	68		1811660-09	OSCILLATOR, XTAL 3.0737 MHZ	-	-	1	-	E67
69	69		2M1213A-00	OSCILLATOR, XTAL 3.3792 MHZ	-	-	-	1	E67
70	70		2M1215A-00	*** THIS ITEM IS NOT USED ***	-	-	-	-	
71	71		1910957-00	74S175 FF-D QUAD COMMON CLO	1	1	1	1	E98

D	I	G	I	T	A	L	TITLE	SECTION A OF B	SIZE	CODE	DOCUMENT NUMBER	REV
							8 LINE EIA ASYNCHRONOUS MUX		K	PL	M7819-0-0	L

AUTOMATED BY PRTLST.3M(41)

P A R T S L I S T

LINE	ITEM	DOCUMENT NUMBER	PART NUMBER		DESCRIPTION	QTY PER VARIATION YD	REFERENCE DESIGNATOR
1	1	D-MD-5011820-0-0	5011820-00		M7819	1	
2	2		1000025-00		560.0 MMF 100V 5%200PPM DM15S	2	C53,C92
3	3		1000018-00		120.0 MMF 100V 5%200PPM DM15S	2	C96,C99
4	4		1000024-00		470.0 MMF 100V 5%200PPM DM15S	26	C93,C100-C122,C131,C132
5	5		1000042-00		1000.0 MMF 100V 5%200PPM DM15S	1	C98
6	6		1001610-00		.01 MFD 50V -20+80 Z5U AXIAL	91	C1-C52,C54-C91,C130
7	7		1000010-00		39.0 MMF 100V 5%200PPM DM15S	1	C97
8	8		1005306-00		6.8MFD 35V 10% S.TANT	6	C123-C126,C128,C129
9	9		1000021-00		220.0 MMF 100V 5%200PPM DM15S	1	C95
10	10		1000023-00		330.0 MMF 100V 5%200PPM DM15S	1	C94
11	11		1105796-00		1N 4004 PIV=400 I= 1A DO41 SP	2	D1,D5
12	12		1109943-00		1N 4733A VZ= 5.1 5% 1W Y	2	D2,D6
13	13		1103340-00		1N 4736A VZ= 6.8 5% 1W Y	2	D3,D7
14	14		1101938-00		1N 4370A VZ= 2.4 5% .40W	2	D4,D8
15	15		1905547-00		7474 FF-D DUAL,EDGE TRIGG	1	E96
16	16		1909705-00	DEC	8881 NAND GATE-QUAD 2IN O	1	E72
17	17		1910091-00	DEC	7437 AND GATE-QUAD 2IN,BU	2	E24,E68
18	18		1910322-00	DEC	1488L DRIVER,LINE,QUAD,EI	4	E7-E10
19	19		1910323-00	DEC	1489L RECEIVER,LINE,QUAD,	6	E1-E6
20	20		1910454-00	DEC	9318 ENCODER, 8 INPUT PRI	1	E82
21	21		2114137-50		UART MOS,REF:19-10459-01 OR 21-1	8	E44-E51
22	22		1910951-00		9602 ONE SHOT-DUAL	2	E78,E106
23	23		1911116-00	DEC	8837 RECEIVER,BUS,HEX,UN	1	E70
24	24		1911579-00		8641 TRANSCEIVER,BUS,QUA	4	E28,E29,E36,E37
25	25		1912083-00	DEC	8647 UNIBUS INTERRUPT CON	2	E89,E90
26	26		1912395-00	DM	8136 COMPARATOR-6BIT UNIF	3	E61,E71,E80
27	27		1912799-00		LS00 NAND-GATE-QUAD 2IN,P	4	E23,E73,E76,E99
28	28		1912801-00		LS02 NOR-GATE-QUAD 2IN	1	E108
29	29		1912803-00		LS04 INVERTER GATE-HEX 1I	5	E12-E14,E86,E101
30	30		1912805-00		LS08 AND GATE-QUAD 2IN,PO	4	E63,E65,E87,E107

REVISION HISTORY			BASIC PART NO: M7819
ENG	ECO NUMBER	REV	SECTION B OF B
RH	M7819-MK010	L	SECTION.VARIATION INDEX [A] 00,YA,YB,YC [B] YD [C] [D] [E] [F] [H] [J] [K] [L] [M] [N]

DRN: ANDY KRAWIECKI	DATE: 18-MAY-79	D I G I T A L
CHK'D: KENT GLEEZEN	DATE: 18-MAY-78	TITLE: PARTS LIST
DES.ENG: BOB CORMIER	DATE: 18-MAY-78	8 LINE EIA ASYNCHRONOUS MUX
RESP.ENG.: RAY HARRINGTON Ray Harrington 14 April 80	DATE: 21-MAR-80	DOCUMENT NUMBER
MFG.ENG.: BOB MULLIN	DATE: 21-MAR-80	SIZE: K / CODE: PL / NUMBER: M7819-0-0 / REV: L
ASSEMBLY NUMBER: D-UA-M7819-0-0	TOP DOCUMENT NUMBER: B-DD-M7819-0-0	FILE NAME: M7819.PLS / EDIT #: 15

"THIS DRAWING AND SPECIFICATIONS HEREIN, ARE THE PROPERTY OF DIGITAL EQUIPMENT CORPORATION AND SHALL NOT BE REPRODUCED OR COPIED OR USED IN WHOLE OR IN PART AS THE BASIS FOR THE MANUFACTURE OR SALE OF ITEMS WITHOUT WRITTEN PERMISSION.
COPYRIGHT (C) 1980, DIGITAL EQUIPMENT CORPORATION "

MK

AUTOMATED BY PRTLST.3M(41)

P A R T S L I S T

LINE	ITEM	DOCUMENT NUMBER	PART NUMBER	DESCRIPTION	QTY PER VARIATION YD	REFERENCE DESIGNATOR
31	31		1912807-00	LS10 NAND GATE-TRIPLE 3IN	1	E97
32	32		1912811-00	LS21 AND GATE-DUAL 4IN,PO	1	E69
33	33		1912816-00	LS32 OR GATE-QUAD 2IN,POS	2	E84,E100
34	34		1912824-00	LS74 FF-D DUAL,EDGE TRIGG	4	E77,E85,E88,E109
35	35		1912830-00	LS90 COUNTER,ASYNCH UP,DE	1	E66
36	36		1912842-00	LS138 DECODER-THREE INPUT,	2	E74,E75
37	37		1912844-00	LS151 MUX 1 OF 8 & DATA	2	E91,E92
38	38		1912845-00	LS153 MUX 1 OF 4 (DUAL)	8	E30-E33,E38-E41
39	39		1912846-00	LS155 DECODER,2 OF 4(DUAL)	3	E83,E94,E95
40	40		1912847-00	LS157 MUX 1 OF 2(QUAD)	5	E19-E22,E102
41	41		1912853-00	LS175 FF-D QUAD	12	E15-E18,E26,E27,E34,E35,E42,E43,
					CONT	E93,E104
42	42		1912860-00	LS259 LATCH 8BIT	3	E62,E64,E103
43	43		2111188-00	3341 64X4 FIFO MEMORY	4	E57-E60
44	44		2112623-00	DUAL BAUD RATE GEN/PROG DIVIDER,	4	E53-E56
45	45		1912854-00	LS193 COUNTER,SYNCHR,4BIT,	2	E79,E105
46	46		1300202-00	47.0 .25 W 5.0 % CC	5	R1-R5
47	47		1300229-00	100.0 .25 W 5.0 % CC	4	R13,R15,R67,R68
48	48		1300309-00	390.0 .25 W 5.0 % CC	1	R30
49	49		1300365-00	1.0 K .25 W 5.0 % CC	5	R11,R12,R14,R27,R61
50	50		1300479-00	10.0 K .25 W 5.0 % CC	17	R16-R25,R31-R36,R62
51	51	BLANK		*** THIS ITEM IS NOT USED ***	-	
52	52		1301322-00	180.0 .25 W 5.0 % CC	4	R26,R28,R29,R63
53	53		1301874-00	5.60 K .25 W 5.0 % CC	2	R64,R65
54	54		1302177-00	47.0 K .25 W 5.0 % CC	25	R66,R37-R60
55	55		1209838-00	SOCKET 16PIN	1	XE52
56	56		1209941-03	HEADER RT ANGLE LEFT L	1	
57	57		1209941-04	HEADER RT ANGLE,RIGHT	1	
58	58		1209941-07	HEADER,100 50POS RT ANGLE	1	J1
59	59		1210711-02	HANDLE,MODULE,HEX	1	
60	60		1211164-04	SW,DIP 1P 1A 8POS	1	E11
61	61		1211164-06	SW,DIP 1P 1A 10POS	1	E81
62	62		5408778-00	PLUG PRIORITY	1	E52
63	63		9006735-00	EYELET, FUNNEL FLANGE, .059 OD X	2	
64	64		9000024-01	EYELET, ROLLED FLANGE, .121 OD X	12	
65	65		9009185-00	JUMPER, WIRE, INSULATED, BLACK B	1	W1
66	66		1811660-02	*** THIS ITEM IS NOT USED ***	-	
67	67		1811660-08	*** THIS ITEM IS NOT USED ***	-	
68	68		1811660-09	*** THIS ITEM IS NOT USED ***	-	
69	69		2M1213A-00	*** THIS ITEM IS NOT USED ***	-	
70	70		2M1215A-00	OSCILLATOR, XTAL 3.8016 MHZ	1	E67
71	71		1910957-00	74S175 FF-D QUAD COMMON CLO	1	E98

DIGITAL	TITLE	SIZE	CODE	DOCUMENT NUMBER	REV
	8 LINE EIA ASYNCHRONOUS MUX	K	PL	M7819-0-0	L
	SECTION B OF B				

MK

THIS DRAWING AND SPECIFICATIONS, HEREIN, ARE THE PROPERTY OF DIGITAL EQUIPMENT CORPORATION AND SHALL NOT BE REPRODUCED OR COPIED OR USED IN WHOLE OR IN PART AS THE BASIS FOR THE MANUFACTURE OR SALE OF ITEMS WITHOUT WRITTEN PERMISSION.
COPYRIGHT © 1977 DIGITAL EQUIPMENT CORPORATION

COMPONENT SIDE VIEW

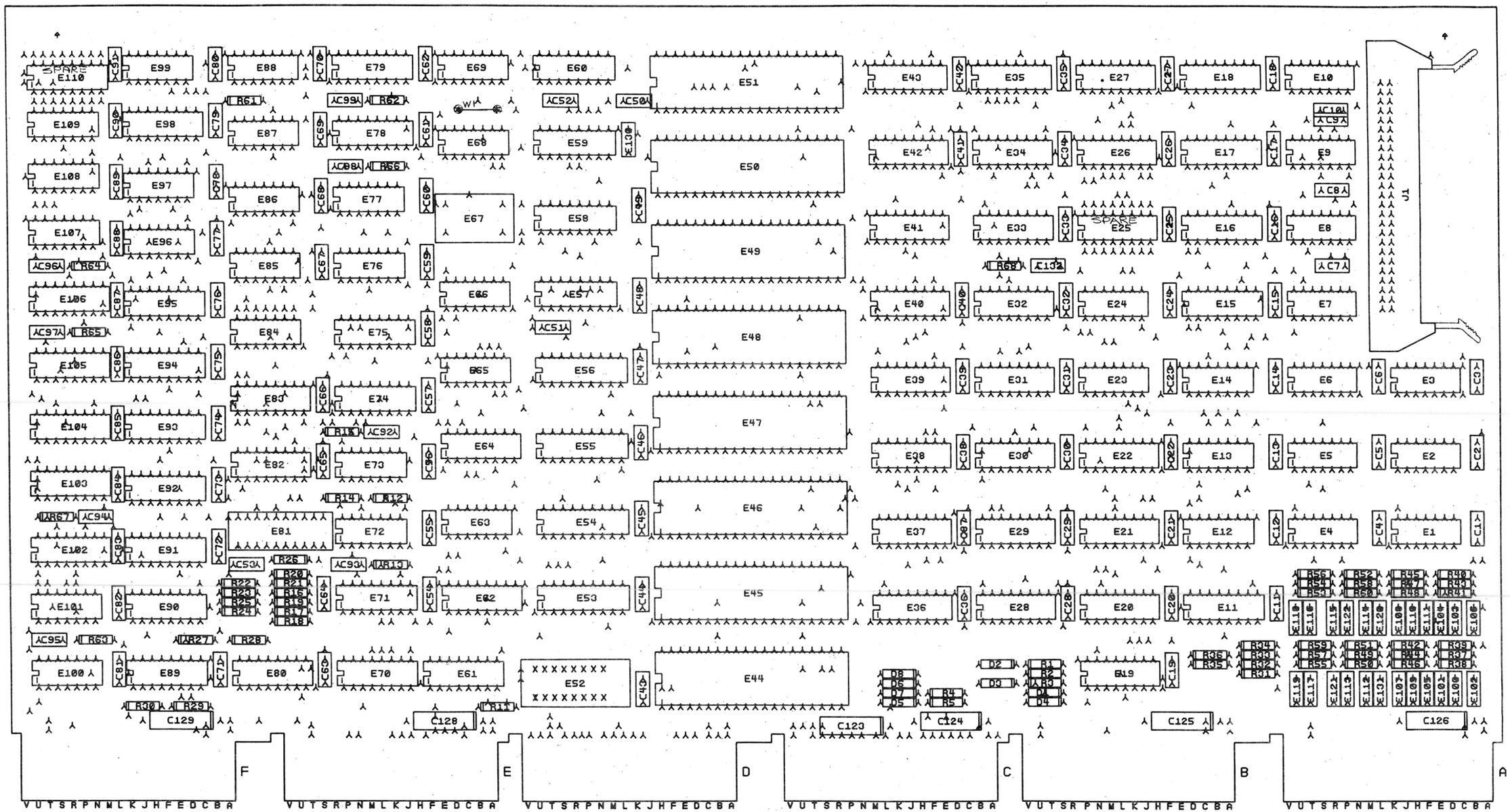

NOTES:
1. B HOLES .0465 (+.000-.0045) MAYNARD ONLY

CHK	CHANGE NO	REV
	M7819-00006 REVISED & REDRAWN	F
	M7819-MK006	H
	M7819-MK7	J
	M7819-MK8	K
	M7819-MK9	L

HOLE DATA

SYMBOL	+	⅄	X	⇑	Z	⊞	Δ	⊡	◈	*
FIN HOLE SIZE	.066	.038	.059	.128						
PLATED	✓	✓	✓	✓						
NON PLATED										
QTY.		23122	16	2						
○-OFF GRD HLE										
DRILL SIZE										

.025 GRID UNLESS INDICATED

BOARD FABRICATION INFORMATION
PANEL SIZE HEX 8.50 X 17.00
PANEL DATA DWG.# E-MD-7606098-Ø-Ø
PANEL MAT'L FL-GF-.052-C 1/1
DEC PS - 1400000
QTY. OF LAYERS 4
PTH. X PRINT AND ETCH
SOLDER MASK Y SIDE 2 Y BOTH SIDES
GOLD CONTACTS Y BOTTOM Y TOP

SIGNATURES	DATE
DRN. R.A. LEVASSEUR	29AUG77
CHK'D.	2.SEP77
ENG.	
PROJ. ENG.	
PROD.	
SCALE 2:1	
SHT. 1 OF 5	
NEXT HIGHER ASSY. E-DD-M7819-Ø	

digital

TITLE 8 LINE EIA ASYN MUX

SIZE	CODE	NUMBER	REV
D	UA	M7819-Ø-Ø	L

ETCH REV E-P2

MK 1 MS#.

"THIS DRAWING AND SPECIFICATIONS, HEREIN, ARE THE PROPERTY OF DIGITAL EQUIPMENT CORPORATION AND SHALL NOT BE REPRODUCED OR COPIED OR USED IN WHOLE OR IN PART AS THE BASIS FOR THE MANUFACTURE OR SALE OF ITEMS WITHOUT WRITTEN PERMISSION.
COPYRIGHT ©1977 DIGITAL EQUIPMENT CORPORATION"

LAYER 1

M7819 5011820E-P2

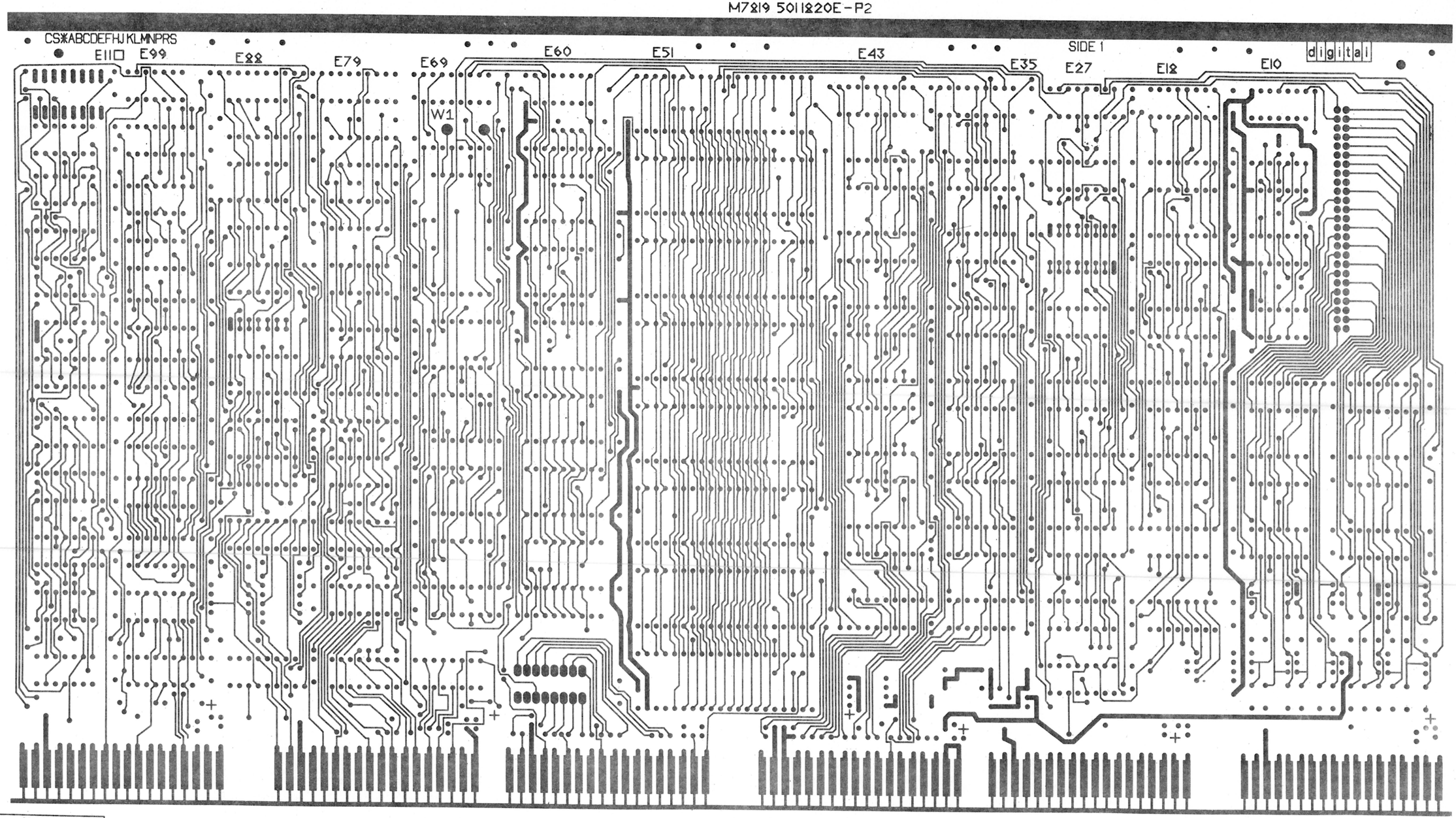

REVISIONS		
CHK	CHANGE NO.	REV.

TITLE	SIZE	CODE	NUMBER	REV.
8 LINE EIA ASYN MUX	D	UA	M7819-0-0	L
SCALE	SHEET 2 OF 5	DIST.		

MK

"THIS DRAWING AND SPECIFICATIONS, HEREIN, ARE THE PROPERTY OF DIGITAL EQUIPMENT CORPORATION AND SHALL NOT BE REPRODUCED OR COPIED OR USED IN WHOLE OR IN PART AS THE BASIS FOR THE MANUFACTURE OR SALE OF ITEMS WITHOUT WRITTEN PERMISSION.
COPYRIGHT © 1977 DIGITAL EQUIPMENT CORPORATION"

GND

LAYER 2

M7819
5011820E-P2

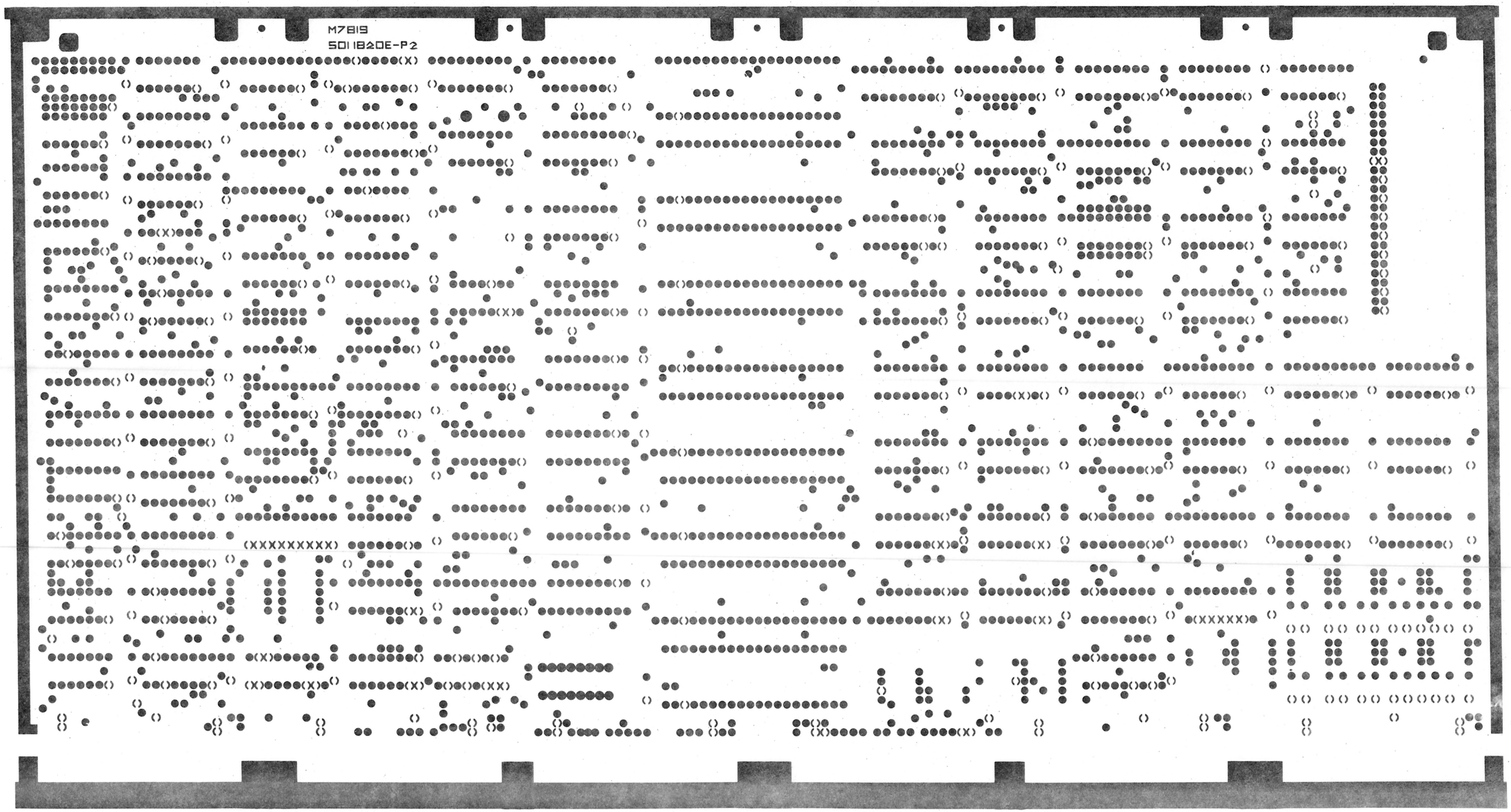

SIZE D CODE UA NUMBER M7819-0-0 REV L

REVISIONS		
CHK	CHANGE NO.	REV.

TITLE	SIZE	CODE	NUMBER	REV.
8 LINE EIA ASYN MUX	D	UA	M7819-0-0	L
SCALE	SHEET 3 OF 5	DIST.		

MK

8 7 6 5 4 3 2 1

"THIS DRAWING AND SPECIFICATIONS, HEREIN, ARE THE PROPERTY OF DIGITAL EQUIPMENT CORPORATION AND SHALL NOT BE REPRODUCED OR COPIED OR USED IN WHOLE OR IN PART AS THE BASIS FOR THE MANUFACTURE OR SALE OF ITEMS WITHOUT WRITTEN PERMISSION.
COPYRIGHT © 1977 DIGITAL EQUIPMENT CORPORATION"

M7819 5011820E-P2

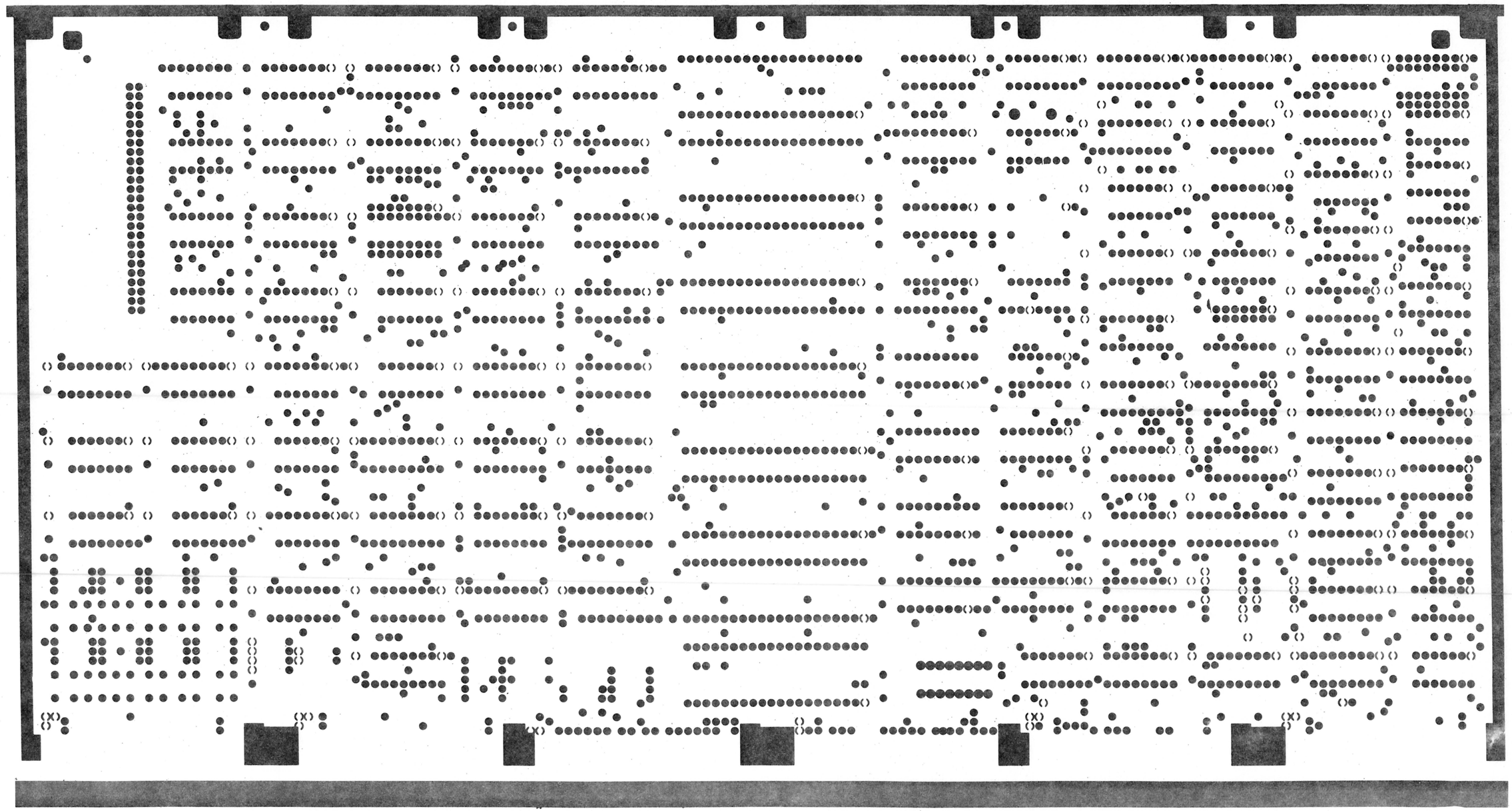

REVISIONS		
CHK	CHANGE NO.	REV.

TITLE	SIZE	CODE	NUMBER	REV.
8 LINE EIA ASYN MUX	D	UA	M7819-0-0	L
SCALE	SHEET 4 OF 5	DIST.	MK	

"THIS DRAWING AND SPECIFICATIONS, HEREIN, ARE THE PROPERTY OF DIGITAL EQUIPMENT CORPORATION AND SHALL NOT BE REPRODUCED OR COPIED OR USED IN WHOLE OR IN PART AS THE BASIS FOR THE MANUFACTURE OR SALE OF ITEMS WITHOUT WRITTEN PERMISSION.
COPYRIGHT © 1977 DIGITAL EQUIPMENT CORPORATION"

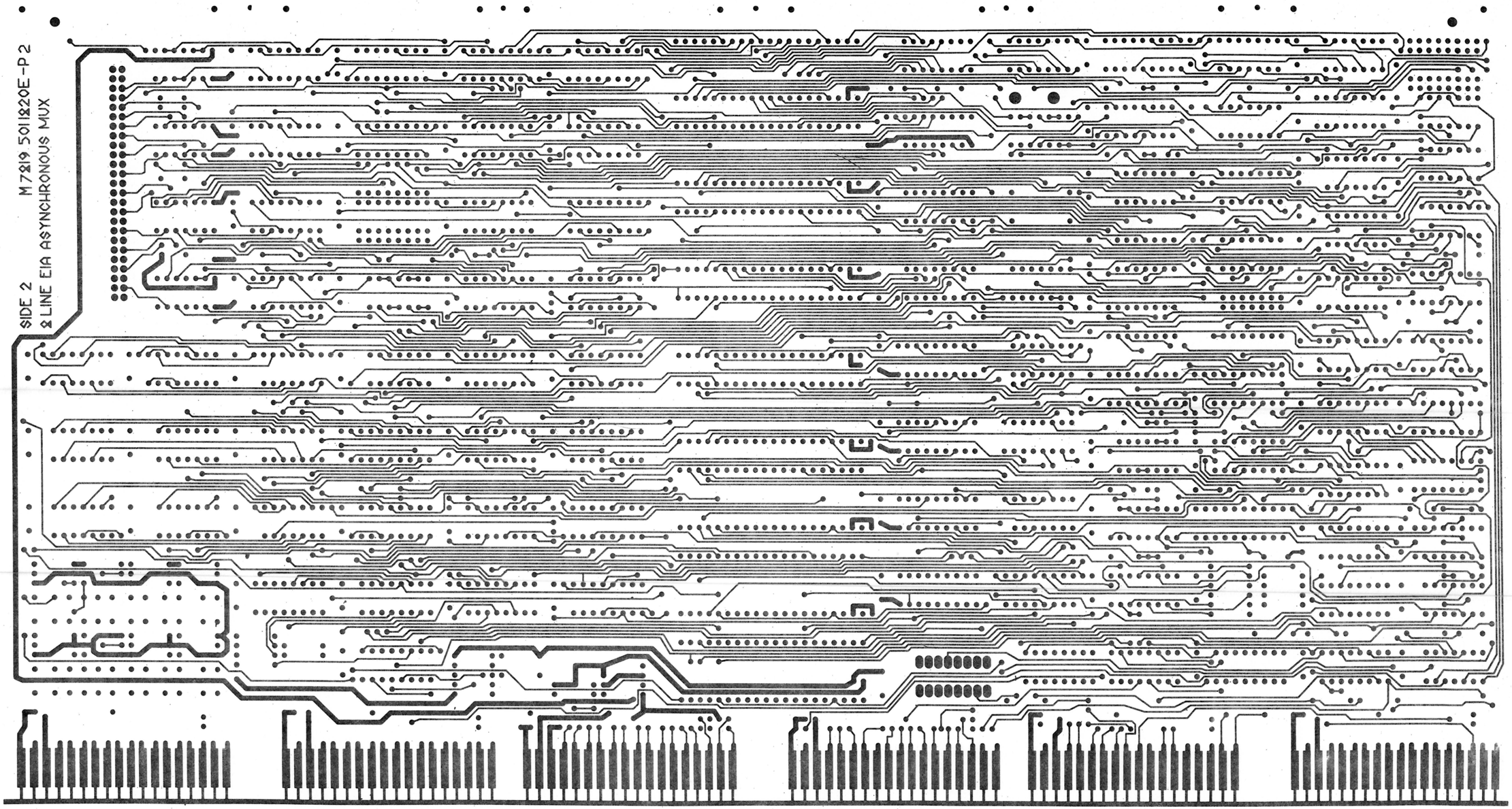

REVISIONS		
CHK	CHANGE NO.	REV.

TITLE	SIZE	CODE	NUMBER	REV.
8 LINE EIA ASYN MUX	D	UA	M7819-0-0	L
SCALE	SHEET 5 OF 5	DIST.		

MK

"THIS DRAWING AND SPECIFICATIONS, HEREIN, ARE THE PROPERTY OF DIGITAL EQUIPMENT CORPORATION AND SHALL NOT BE REPRODUCED OR COPIED OR USED IN WHOLE OR IN PART AS THE BASIS FOR THE MANUFACTURE OR SALE OF ITEMS WITHOUT WRITTEN PERMISSION.
COPYRIGHT © 1976, DIGITAL EQUIPMENT CORPORATION"

UNIBUS

INTERRUPT CONTROL SHT#3
BUS NPR
BUS SSYN
BUS BG IN
BUS BBSY
BUS BG OUT
BUS BR
BUS SACK
BUS INTR
V (8:2)
INTR
T INT
R INT
RESET

CLR
CSR SHT#6
R DONE
T INT
LD CSR
LD HCSR
LD LCSR
R INT
RD RBUF
M SCAN EN
SAE
MAINT
RESET MAINT MSCAN EN SAE RIE TIE RD(15:Ø) TABV SA

IR R DONE
RECEIVER CONTROL SHT#9
M SCAN EN
SAE
MAINT
INH SSYN
SHI
SHO
SCAN C
SCAN B
SCAN A
SA
RD RBUF
SDI (7:Ø)
SI (7:Ø)
DV
SDO (7:Ø)
LD LPR
RD (2:Ø)
INH SSYN
L DATA
RDA (7:Ø)
SAM (7:Ø)
DA
V

SILO & CLK SHT#11
IR
R DONE
SILO OUT
M SCAN ENA
MASTER CLK
CS (7:Ø)
INH SSYN
SHI
SHO
SCANC SCAN B SCAN A
PER
FER
OVR
TCLK (7:Ø)
RCLK (7:Ø)
RDI (7:Ø)
RESET
RD (15:8)

TRANSMIT CONTROL SHT#1Ø
SCAN C
SCAN B
SCAN A
T RDY
T LINE C
T LINE B
T LINE A
PH 4
PH 2
PH 1
CLK
LD TBUF
LINE (7:Ø)
RESET
DS (7:Ø)
V
TBMT

UARTS SHT#12 THRU#15
PER
FER
OVR
T CLK (7:Ø)
R CLK (7:Ø)
RDI (7:Ø)
CS (7:Ø)
RESET
DS (7:Ø)
TBMT
SI (7:ØØ)
RDA (7:Ø)
SAM (7:Ø)
DA
SDO (7:Ø)
TBUF (7:Ø)
RD (7:Ø)

DATA TRANSCEIVERS SHT#8
BUS D (15:ØØ)
D (15:ØØ)
RD (15:ØØ)

INTR
V (8:2)
R DONE
SILO OUT
SA
M SCAN EN
DV
SAE
RIE
TIE
TRDY
T LINE C
T LINE B
T LINE A
MAINT
LINE (7:Ø)
CO (7:Ø)
RI (7:Ø)
DTR (7:Ø)
RCI
SEL RA2 RA1 CLEAR

LINE & TBUF SHT#6
LD LTCR
LD LTDR
LD TDR
LD TCR
RD (7:Ø&7)
LD TBUF
RESET
LINE (7:Ø)
TBUF (7:Ø)

ADDRESS SELECT SHT#2
SEL RA2 RA1 RCI
BUS INIT
BUS C1
BUS CØ
BUS MSYN
BUS A (17:ØØ)
BUS SSYN
L DATA
LD CSR
LD HCSR
LD LCSR
LD RBUF
LD LPR
INH SSYN
LD LTCR
LD LTDR
LD TCR
LD TDR
LD HTCR
LD HTDR
INIT

RD (15:8)
BREAK & DTR SHT#5
LD TCR
LD TDR
LD HTCR
LD HTDR
RESET
INIT
BRI (7:Ø)
DTR (7:Ø)

RESET SHT#3
RESET
INIT
V
CLR
CLEAR
INIT

EIA RECEIVERS SHT#4
CO (7:Ø)
RI (7:Ø)
RDI (7:Ø)
CO (7:Ø)
RI (7:Ø)
REC (7:Ø)

EIA DRIVERS SHT#5
SDO (7:Ø)
BRK (7:Ø)
DTR (7:Ø)

J1
BCØ5W
TO DISTRIBUTION PANEL

REVISIONS	REV.	CHANGE NO.	CHK

DRN. K. Quib	2-26-76	FIRST USED ON: DZ11-A
CHK'D [illegible]	3-2-76	TITLE: M7819 BLOCK DIAGRAM
ENG. [illegible]	3-2-76	
PROJ. [illegible]	3-2-76	
PROD. R. Wall	3-2-76	
NEXT HIGHER ASSY.		
D-UA-M7819-Ø-Ø		SIZE D | CODE BD | NUMBER M7819-Ø-8 | REV. A
SCALE —		
SHEET 1 OF 1		DIST.

digital

DEC FORM NO. DRD 102-D

MK

THIS DRAWING AND SPECIFICATIONS, HEREIN, ARE THE PROPERTY OF DIGITAL EQUIPMENT CORPORATION AND SHALL NOT BE REPRODUCED OR COPIED OR USED IN WHOLE OR IN PART AS THE BASIS FOR THE MANUFACTURE OR SALE OF ITEMS WITHOUT WRITTEN PERMISSION.
COPYRIGHT © 1976, DIGITAL EQUIPMENT CORPORATION

POWER & GROUND TABLE

IC TYPE	GND	+5V	+12V	-12V	V+	V-
UART (16Ø2)	PIN 3	PIN 1	—	PIN 2	—	—
DEC 5Ø16	PIN 11	PIN 2	PIN 9	—	—	—
DEC 3341	PIN 8	PIN 16	—	PIN 1	—	—
DEC 1488	PIN 7	—	—	—	PIN 14	PIN 1
14 PIN IC'S	PIN 7	PIN 14	—	—	—	—
16 PIN IC'S	PIN 8	PIN 16	—	—	—	—
DEC 74LS9Ø	PIN 1Ø	PIN 5	—	—	—	—

NOTES:

1. THE 'B' AND 'D' INPUTS SHOWN ON THE 8136 LOGIC SYMBOL HAS THE FOLLOWING MEANING:
   B=UNIBUS RECEIVER INPUT.
   D=NORMAL TTL LOGIC INPUT.
2. THE 8136 CONTAINS SIX VOLTAGE COMPARATORS WITH A COMMON OUTPUT. EACH COMPARATOR MUST HAVE ITS 'B' AND 'D' INPUTS THE SAME, AT THE SAME TIME, FOR A TRUE (HIGH) OUTPUT.
3. WHEN A SWITCH IS CLOSED (ON) THE COMPARATOR RECOGNIZES THE RESPECTIVE UNIBUS ADDRESS BIT WHEN IT IS A LOGIC ONE (LOW). WHEN A SWITCH IS OPEN (OFF) THE COMPARATOR RECOGNIZES THE RESPECTIVE UNIBUS ADDRESS BIT WHEN IT IS A LOGIC ZERO (HIGH).
4. PRIORITY 5 IS STANDARD FOR THIS MODULE; THEREFORE E52 SHOWS THE REQUEST AND GRANT PATHS FOR PRIORITY 5.
5. WHEN A SWITCH OPEN (OFF), THE RESPECTIVE VECTOR IS @ "ONE". WHEN A SWITCH IS CLOSED (ON), THE RESPECTIVE VECTOR BIT IS @ "ZERO".

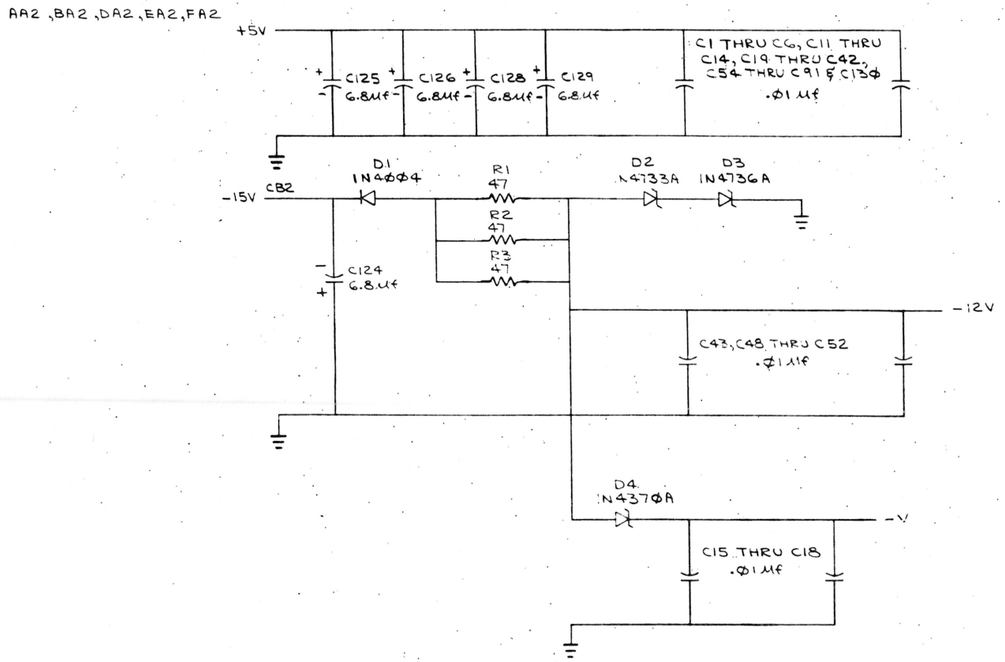

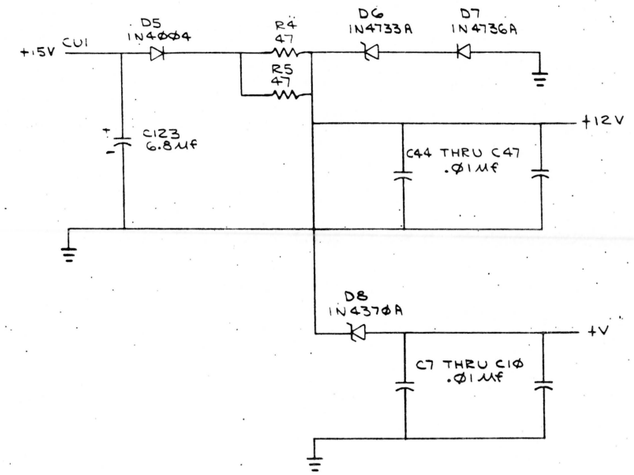

(POWER AND GROUND)

REV.	CHANGE NO.	CHK	REVISIONS
C	M7819-00001	EL	H. Denemore 6-4-76
D	M7819-00002	EL	R.A. Cormier 7-30-76
E	M7819-00003	EL	R. Cormier 8-30-76
F	M7819-00004	WE	C. Jones 14 OCT 76
H	M7819-MK006	SF	J. ROBERTS 27 OCT 76
J	M7819-MK007	SF	J. ROBERTS 21 SEP 77
K	M7819-MK009	SF	R. HARRINGTON 19 JAN 78
L	M7819-MK010	SF	R. HARRINGTON 27-JUL-79
		SF	R. HARRINGTON 20-MAR-80

DRN.		2-11-76
CHK'D		3-2-76
ENG.		3-2-76
PROJ. ENG.		3-2-76
PROD.		3-2-76
NEXT HIGHER ASSY.	D-UA-M7819-Ø-Ø	
SCALE	—	
SHEET	1 OF 15	

FIRST USED ON M7819

digital

TITLE 8 LINE EIA ASYNCHRONOUS MUX (S1)

SIZE	CODE	NUMBER	REV.
D	CS	M7819-Ø-1	L

DIST.

MK

EC FORM NO. RD 102-D

THIS DRAWING AND SPECIFICATIONS, HEREIN, ARE THE PROPERTY OF DIGITAL EQUIPMENT CORPORATION AND SHALL NOT BE REPRODUCED OR COPIED OR USED IN WHOLE OR IN PART AS THE BASIS FOR THE MANUFACTURE OR SALE OF ITEMS WITHOUT WRITTEN PERMISSION.
COPYRIGHT © 1976, DIGITAL EQUIPMENT CORPORATION"

+5V
R16 1ΦK
R17 1ΦK
R18 1ΦK
R19 1ΦK
R20 1ΦK
R21 1ΦK
R22 1ΦK
R23 1ΦK
R24 1ΦK
R25 1ΦK
E81
1Φ 11
9 12
8 13
7 14
6 15
5 16
4 17
3 18
2 19
1 20
SEE NOTE 3
8136 E71
BUS A12 L ECI 11 B4
1Φ D4
BUS A11L ELI 5 B3
6 D3
BUS A10 L EPI 3 B2
4 D2
BUS A09 L ERI 1 B1
2 D1
BUS A08 L EN2 13 B5
12 D5
BUS A07 L EP2 15 B6
14 D6
STB 7
OUT 9
8136 E80
BUS A06 L EUI 11 B4
1Φ D4
BUS A05 L EVI 5 B3
6 D3
BUS A04 L EU2 13 B5
12 D5
BUS A03 L EV2 3 B2
4 D2
15 B6
14 D6
1 B1
2 D1
STB 7
OUT 9
SEE NOTES 1 & 2
8136 E61
BUS MYSN L EE1 3 B2
4 D2
BUS A17 L EDI 11 B4
1Φ D4
BUS A16 L EE2 13 B5
12 D5
BUS A15 L ED2 5 B3
6 D3
BUS A14 L EKI 15 B6
14 D6
BUS A13 L EK2 1 B1
2 D1
STB 7
OUT 9
+5V R11 1K
74LS00 E73
8881 E72
S9 INH SSYN L DBI 6
BUS SSYN L EJI 4
+5V R12 1K R13 1ΦΦ
γ=100 NSEC C93 470PF
+5V R14 1K R15 1ΦΦ
γ=100 NSEC C92 560PF
S2 L DATA H
EL2
S2 SEL L
BUS CΦ L EJ2
BUS C1 L EF2
BUS AΦ2 L EFI
BUS AΦ1 L EHI
BUS AΦΦ L EH2
BUS INIT L DLI
8837 E7Φ
74LS32 E84
AD RBUF L
74LS138 E74
SEL A
SEL B
SEL C
EN
S2 LD CSR L
S2 LD LPR L
S2 LD TCR L
S2 LD TDR L
74LS138 E75
S2 LD LCSR L
S2 LD HCSR L
S2 LD LTCR L
S2 LD HTCR L
S2 LD LTDR L
S2 LD HTDR L
S2 KCI H
S2 RA2 H
S2 RA1 H
S2 INIT H

REVISIONS		
CHK	CHANGE NO.	REV.

(ADDRESS SELECT)

TITLE 8 LINE EIA ASYNCHRONOUS MUX (S2)
SIZE D | CODE CS | NUMBER M7819-Ø-1 | REV L
SCALE — | SHEET 2 OF 15 | DIST. MK

TC FORM NO. D 138

"THIS DRAWING AND SPECIFICATIONS, HEREIN, ARE THE PROPERTY OF DIGITAL EQUIPMENT CORPORATION AND SHALL NOT BE REPRODUCED OR COPIED OR USED IN WHOLE OR IN PART AS THE BASIS FOR THE MANUFACTURE OR SALE OF ITEMS WITHOUT WRITTEN PERMISSION.
COPYRIGHT © 1976, DIGITAL EQUIPMENT CORPORATION"

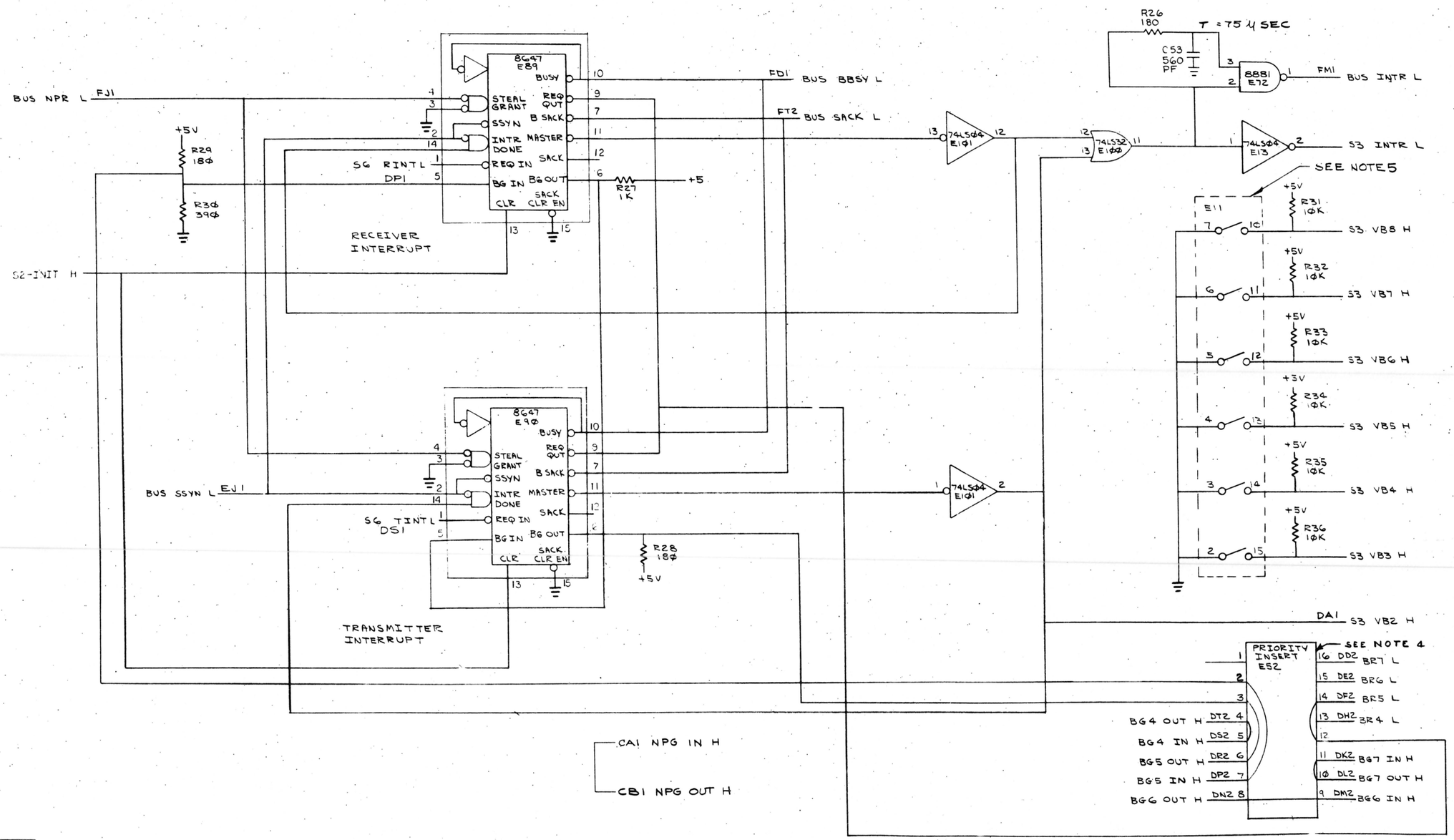

REVISIONS		
CHK	CHANGE NO.	REV.

TITLE	SIZE	CODE	NUMBER	REV.
8 LINE EIA ASYNCHRONOUS MUX (S3)	D	CS	M7819-Ø-1	L
SCALE	SHEET 3 OF 15	DIST.		

DEC FORM NO. DRD 138

MK

"THIS DRAWING AND SPECIFICATIONS, HEREIN, ARE THE PROPERTY OF DIGITAL EQUIPMENT CORPORATION AND SHALL NOT BE REPRODUCED OR COPIED OR USED IN WHOLE OR IN PART AS THE BASIS FOR THE MANUFACTURE OR SALE OF ITEMS WITHOUT WRITTEN PERMISSION.
COPYRIGHT ©1976, DIGITAL EQUIPMENT CORPORATION"

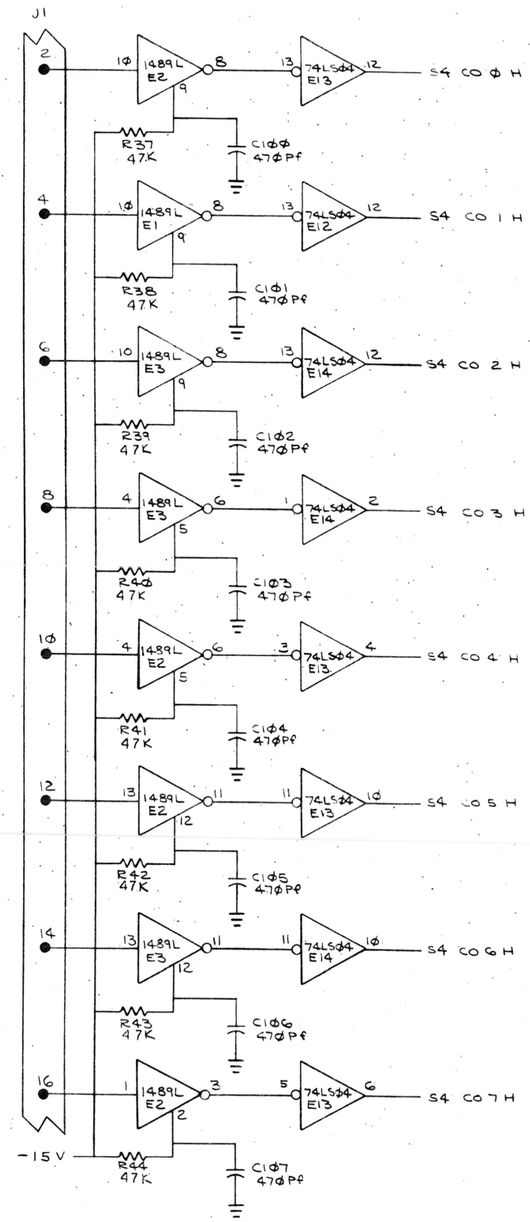

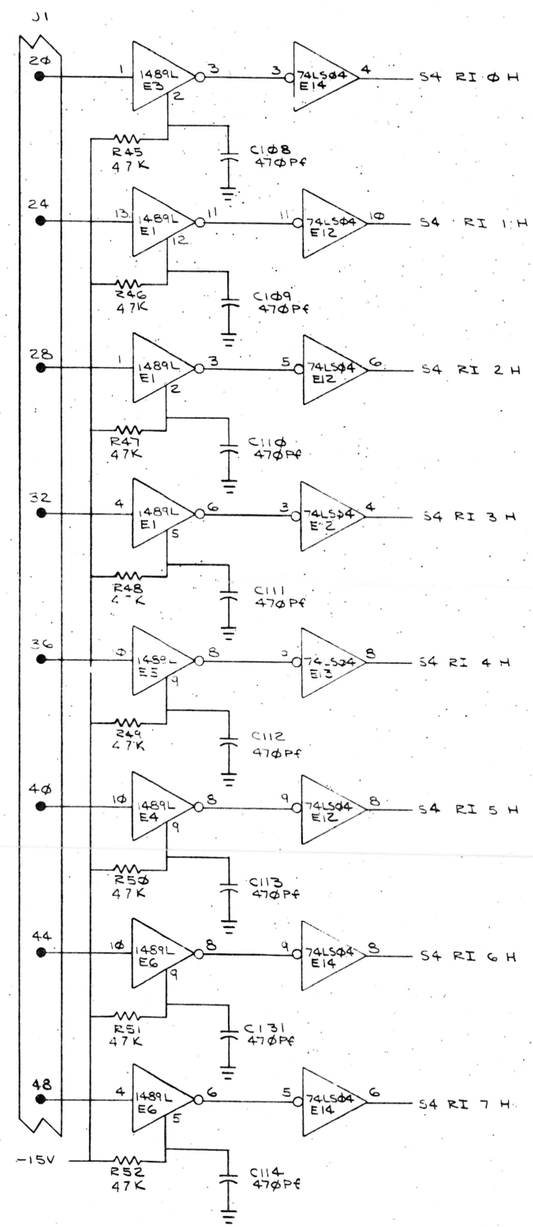

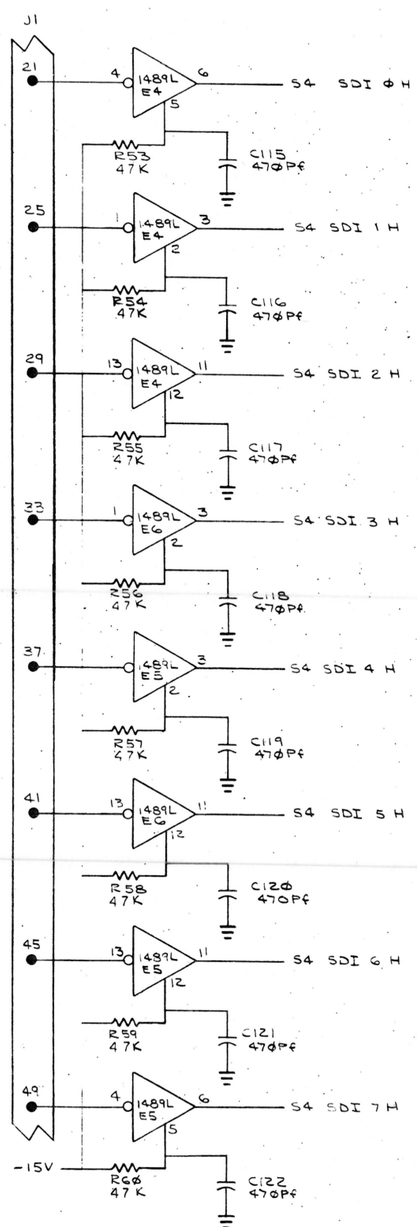

REVISIONS

CHK	CHANGE NO.	REV.

(EIA RECEIVERS)

TITLE	SIZE	CODE	NUMBER	REV.
8 LINE EIA ASYNCHRONOUS MUX (S4)	D	CS	M7819-Ø-1	L
SCALE —	SHEET 4 OF 15	DIST.		

MK

"THIS DRAWING AND SPECIFICATIONS, HEREIN, ARE THE PROPERTY OF DIGITAL EQUIPMENT CORPORATION AND SHALL NOT BE REPRODUCED OR COPIED OR USED IN WHOLE OR IN PART AS THE BASIS FOR THE MANUFACTURE OR SALE OF ITEMS WITHOUT WRITTEN PERMISSION.
COPYRIGHT © 1976, DIGITAL EQUIPMENT CORPORATION"

S8 RD 8 H
S8 RD 9 H
S8 RD 10 H
S8 RD 11 H

74LS175 E18: D2, D3, D1, DØ, CLR, CLK; R2(1), R2(Ø), R3(1), R3(Ø), R1(1), R1(Ø), RØ(1), RØ(Ø)

S5 DTR Ø H
S5 DTR 1 H
S5 DTR 2 H
S5 DTR 3 H

1488 E10

J1: DTR Ø H, DTR 1 H, DTR 2 H, DTR 3 H

S8 INIT L

S8 RESET L

74LS175 E17: D2, D1, D3, DØ, CLR, CLK; R2(1), R2(Ø), R1(1), R1(Ø), R3(1), R3(Ø), RØ(1), RØ(Ø)

S12 SDO Ø H — 1488 E9 — TRANS Ø L
S12 SDO 1 H — 1488 E9 — TRANS 1 L
S13 SDO 2 H — 1488 E9 — TRANS 2 L
S13 SDO 3 H — 1488 E7 — TRANS 3 L

J1: TRANS Ø L, TRANS 1 L, TRANS 2 L, TRANS 3 L

S8 RD 12 H
S8 RD 13 H
S8 RD 14 H
S8 RD 15 H

74LS175 E15: DØ, D1, D2, D3, CLR, CLK; RØ(1), RØ(Ø), R1(1), R1(Ø), R2(1), R2(Ø), R3(1), R3(Ø)

S5 DTR 4 H
S5 DTR 5 H
S5 DTR 6 H
S5 DTR 7 H

1488 E9, 1488 E7, 1488 E8

J1: DTR 4 H, DTR 5 H, DTR 6 H, DTR 7 H

S2 LD TCR L
S2 LD HTCR L
74LSØØ E23

74LS175 E16: D1, D2, D3, DØ, CLR, CLK; R1(1), R1(Ø), R2(1), R2(Ø), R3(1), R3(Ø), RØ(1), RØ(Ø)

S14 SDO 4 H — 1488 E8 — TRANS 4 L
S14 SDO 5 H — 1488 E8 — TRANS 5 L
S15 SDO 6 H — 1488 E8 — TRANS 6 L
S15 SDO 7 H — 1488 E7 — TRANS 7 L

J1: TRANS 4 L, TRANS 5 L, TRANS 6 L, TRANS 7 L

S2 LD HTDR L
S2 LD TDR L
74LSØØ E73

J1: 19, 22, 23, 26, 27, 30, 31, 34, 35, 38, 39, 42, 43, 46, 47, 50

REVISIONS		
CHK	CHANGE NO.	REV.

(DTR & BRK & EIA TRANSMITTER)

TITLE: 8 LINE EIA ASYNCHRONOUS MUX (S5)
SIZE D | CODE CS | NUMBER M7819-Ø-1 | REV. L
SCALE — | SHEET 5 OF 15 | DIST.

DEC FORM NO. MD 138

MK

"THIS DRAWING AND SPECIFICATIONS, HEREIN, ARE THE PROPERTY OF DIGITAL EQUIPMENT CORPORATION AND SHALL NOT BE REPRODUCED OR COPIED OR USED IN WHOLE OR IN PART AS THE BASIS FOR THE MANUFACTURE OR SALE OF ITEMS WITHOUT WRITTEN PERMISSION.
COPYRIGHT © 1976, DIGITAL EQUIPMENT CORPORATION"

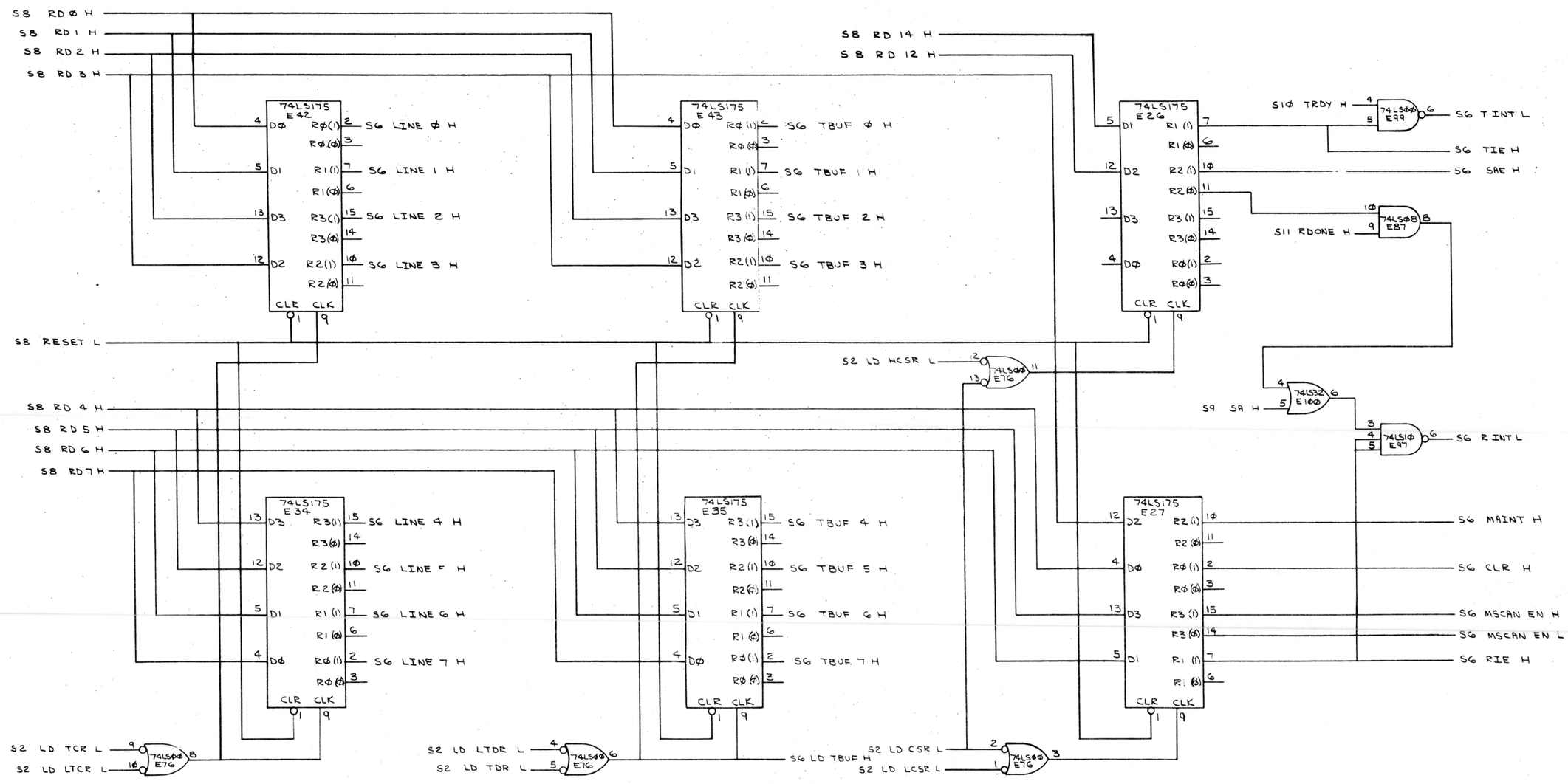

REVISIONS		
CHK	CHANGE NO.	REV.

(REGISTERS)

TITLE	SIZE	CODE	NUMBER	REV.
8 LINE EIA ASYNCHRONOUS MUX (S6)	D	CS	M7819-0-1	L
SCALE	SHEET 6 OF 15	DIST.		

EC FORM NO. D 138

"THIS DRAWING AND SPECIFICATIONS, HEREIN, ARE THE PROPERTY OF DIGITAL EQUIPMENT CORPORATION AND SHALL NOT BE REPRODUCED OR COPIED OR USED IN WHOLE OR IN PART AS THE BASIS FOR THE MANUFACTURE OR SALE OF ITEMS WITHOUT WRITTEN PERMISSION.
COPYRIGHT © 1976, DIGITAL EQUIPMENT CORPORATION"

74LS157 E19: S1Ø T LINE B H, S3 VB 8 H, S1Ø T LINE A H, S3 VB2 H, S3 VB3 H, S6 MAINT H, STB SØ → S7 D1Ø H, S7 D11 H, S7 D12 H, S7 D13 H, S7 D14 H, S7 D15 H

74LS153 E41: S11 RDAT Ø H, S6 LINE Ø H, S4 RI Ø H, S11 RDAT 1 H, S6 LINE 1 H, S4 RI 1 H → S7 DØ H, S7 D1 H

74LS153 E3Ø: S11 R LINE A H, S5 DTR Ø H, S4 CO Ø H, S11 R LINE B H, S5 DTR 1 H, S4 CO 1 H → S7 D8 H, S7 D9 H

74LS153 E42: S11 RDAT 2 H, S6 LINE 2 H, S4 RI 2 H, S11 RDAT 3 H, S6 LINE 3 H, S4 RI 3 H → S7 D2 H, S7 D3 H

74LS153 E31: S1Ø T LINE C H, S11 R LINE C H, S5 DTR 2 H, S4 CO 2 H, S5 DTR 3 H, S4 CO 3 H → S7 D1Ø H, S7 D11 H

74LS153 E38: S11 RDAT 4 H, S6 LINE 4 H, S4 RI 4 H, S11 RDAT 5 H, S6 LINE 5 H, S4 RI 5 H → S7 D4 H, S7 D5 H

74LS153 E33: S6 SAE H, S11 PE H, S5 DTR 4 H, S4 CO 4 H, S6 SA H, S11 FE H, S5 DTR 5 H, S4 CO 5 H → S7 D12 H, S7 D13 H

74LS153 E39: S11 RDAT 6 H, S6 LINE 6 H, S4 RI 6 H, S11 RDAT 7 H, S6 LINE 7 H, S4 RI 7 H → S7 D6 H, S7 D7 H

74LS153 E32: S6 TIE H, S11 OR H, S5 DTR 6 H, S4 CO 6 H, S9 DV H, S5 DTR 7 H, S4 CO 7 H → S7 D14 H, S7 D15 H

S2 RA H, S2 RA2 H → 74LSØØ E23 → 7437 E24

S8 CLEAR H, S3 VB4 H, S6 MSCAN EN H, S3 VB5 H, S6 RIE H, S3 VB6 H, S11 RDONE H, S3 VB7 H → 74LS157 E2Ø (STB SØ)

S3 INTR L → 74LSØØ E23 → 7437 E24

S2 SEL L, S2 RCI H → 74LS32 E1ØØ

S1Ø TRDY H → R68 100Ω, C132 470PF, T=50μSEC

REVISIONS		
CHK	CHANGE NO.	REV.

(OUTPUT DATA MULTIPLEXER)

TITLE	SIZE	CODE	NUMBER	REV.
8 LINE EIA ASYNCHRONOUS MUX (S7)	D	CS	M7819-Ø-1	L
SCALE — / — SHEET 7 OF 15	DIST.			MK

"THIS DRAWING AND SPECIFICATIONS, HEREIN, ARE THE PROPERTY OF DIGITAL EQUIPMENT CORPORATION AND SHALL NOT BE REPRODUCED OR COPIED OR USED IN WHOLE OR IN PART AS THE BASIS FOR THE MANUFACTURE OR SALE OF ITEMS WITHOUT WRITTEN PERMISSION.
COPYRIGHT © 1976, DIGITAL EQUIPMENT CORPORATION"

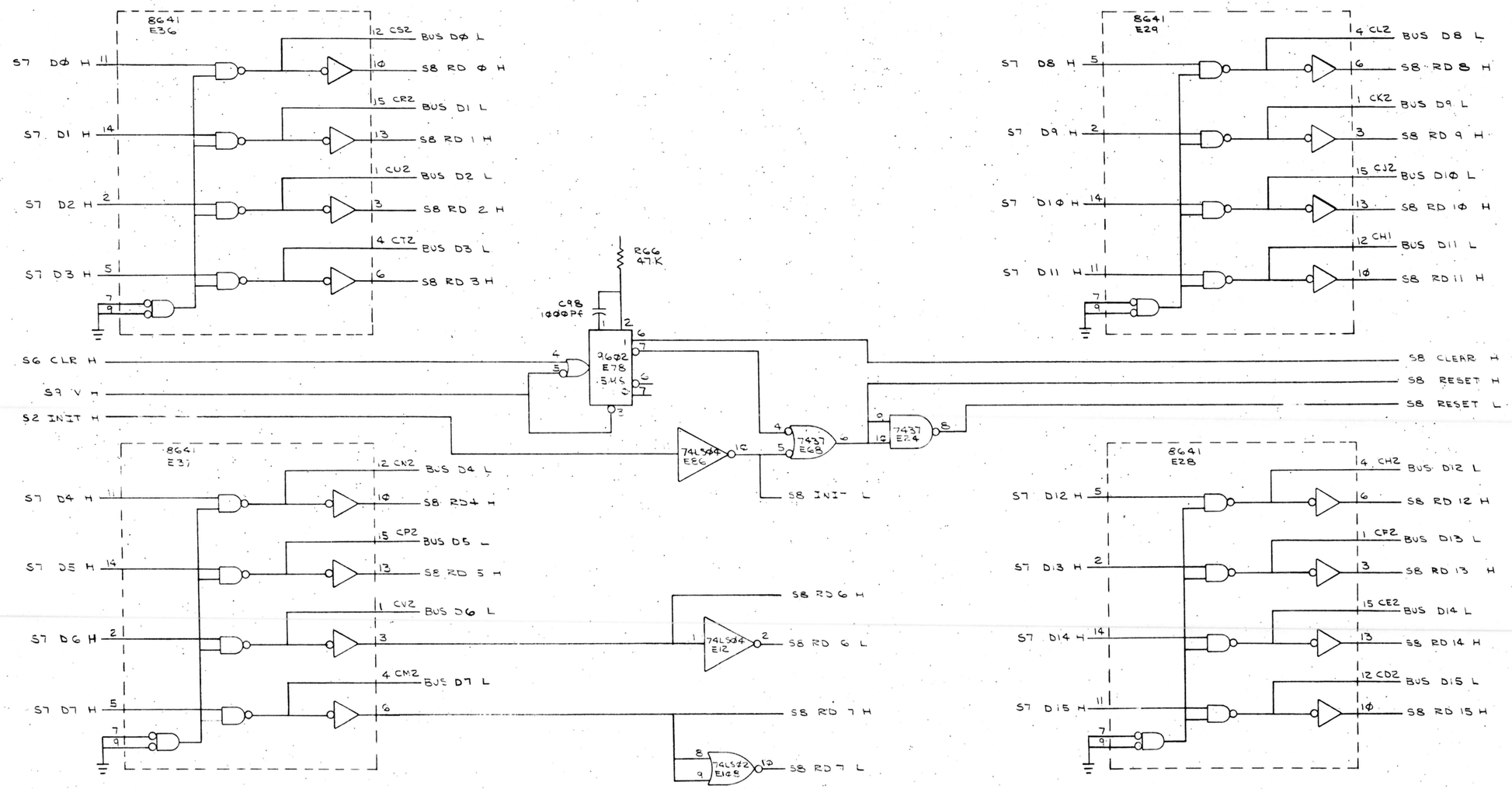

REVISIONS		
CHK	CHANGE NO.	REV.

(UNIBUS TRANSCEIVERS AND RESET)

TITLE	SIZE	CODE	NUMBER	REV.
8 LINE EIA ASYNCHRONOUS MUX (S8)	D	CS	M7819-Ø-1	L
SCALE — / —	SHEET 8 OF 15	DIST.		

DEC FORM NO. 1PD 138

MK

"THIS DRAWING AND SPECIFICATIONS, HEREIN, ARE THE PROPERTY OF DIGITAL EQUIPMENT CORPORATION AND SHALL NOT BE REPRODUCED OR COPIED OR USED IN WHOLE OR IN PART AS THE BASIS FOR THE MANUFACTURE OR SALE OF ITEMS WITHOUT WRITTEN PERMISSION.
COPYRIGHT ©1976, DIGITAL EQUIPMENT CORPORATION"

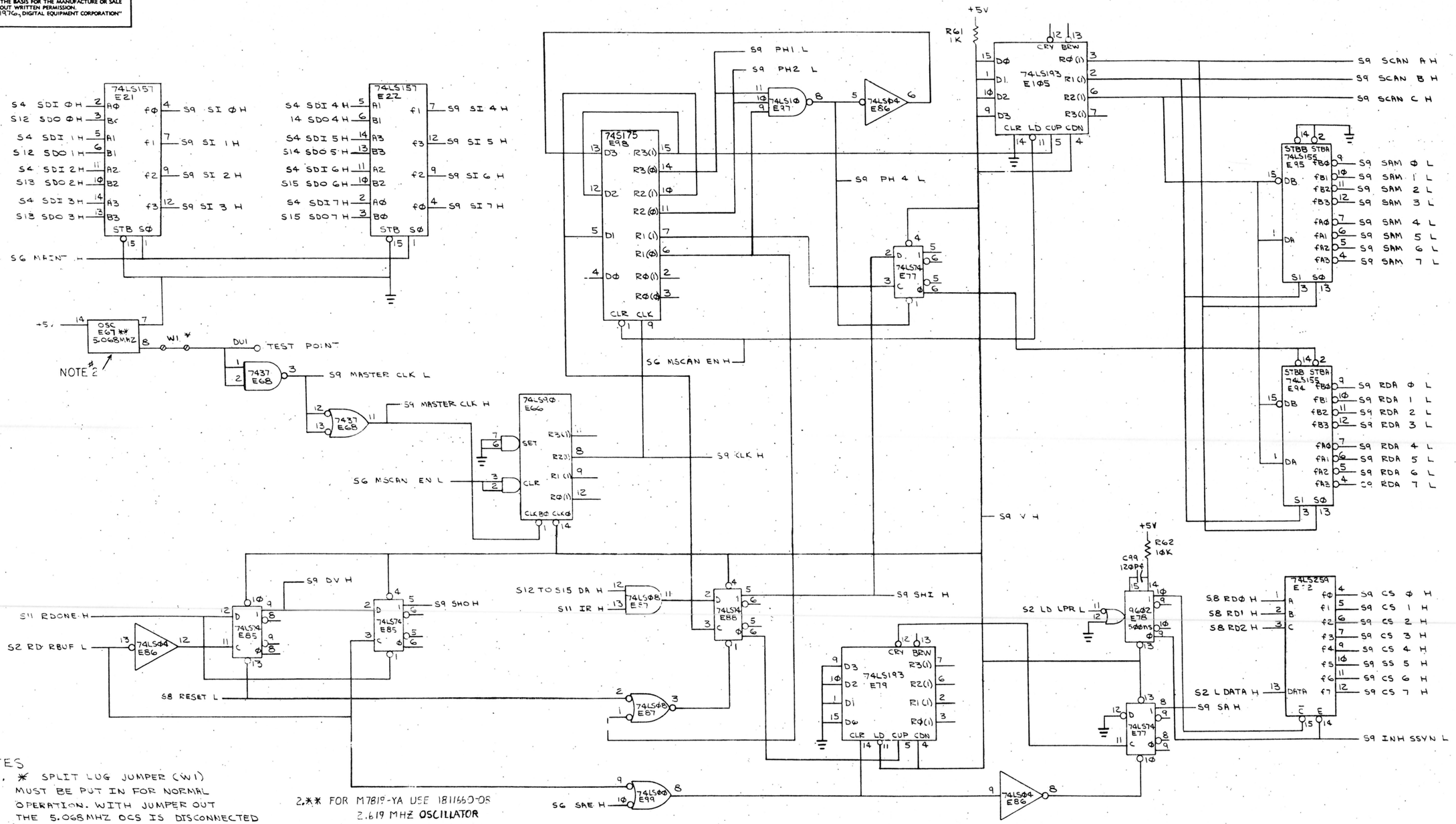

NOTES

1. * SPLIT LUG JUMPER (W1) MUST BE PUT IN FOR NORMAL OPERATION. WITH JUMPER OUT THE 5.068MHZ OCS IS DISCONNECTED AND AN EXT TEST POINT SIGNAL CAN DRIVE THE SCANNER. THIS POINT IS FOR IN-HOUSE USE ONLY.

2.** FOR M7819-YA USE 1811660-08
2.619 MHZ OSCILLATOR
FOR M7819-YB USE 1811660-09
3.0737 MHZ OSCILLATOR
FOR M7819-YC USE 2M1213A-00
3.3792 MHZ OSCILLATOR
FOR M7819-YD, USE 2M1215A-00
3.8016 MHZ. OSCILLATOR.

REVISIONS		
CHK	CHANGE NO.	REV.

(RECEIVER CONTROL)

TITLE	SIZE	CODE	NUMBER	REV.
8 LINE EIA ASYNCHRONOUS MUX (S9)	D	CS	M7819-Ø-1	L
SCALE —	SHEET 9 OF 15	DIST.	MK	

EC FORM NO. 2138

"THIS DRAWING AND SPECIFICATIONS, HERETN, ARE THE PROPERTY OF DIGITAL EQUIPMENT CORPORATION AND SHALL NOT BE REPRODUCED OR COPIED OR USED IN WHOLE OR IN PART AS THE BASIS FOR THE MANUFACTURE OR SALE OF ITEMS WITHOUT WRITTEN PERMISSION.
COPYRIGHT ©1976, DIGITAL EQUIPMENT CORPORATION"

S12 TO S15 TBMT H

74LS04 E86

S6 LINE Ø H
S6 LINE 1 H
S6 LINE 2 H
S6 LINE 3 H
S6 LINE 4 H
S6 LINE 5 H
S6 LINE 6 H
S6 LINE 7 H

S4 SCAN C H
S9 SCAN B H
S9 SCAN A H

74LS151 E91 — STB, DØ–D7, FØ, F1, S2 S1 SØ

74LS157 E1Ø2 — BØ AØ B1 A1 1Ø B2 11 A2 13 B3 14 A3, STB SØ, FØ F1 F2 F3

74LS259 E1Ø3 — A B C DATA, E, FØ–F7

74LS175 E1Ø4 — DØ D1 D2 D3, CLR CLK, RØ(1) RØ(Ø) R1(1) R1(Ø) R2(1) R2(Ø) R3(1) R3(Ø)

9318 E82 — 1Ø 11 12 13 1 2 3 4, Ø 1 2 3 4 5 6 7, AØ A1 A2, EØ GS, E1

S6 MSCAN EN H

74LS175 E93 — D3 D2 D1 DØ, CLR CLK, R3(1) R3(Ø) R2(1) R2(Ø) R1(1) R1(Ø) RØ(1) RØ(Ø)

R67 1ØØ — C94 330 PF — τ = 50NSEC

S9 PHI L

74LS04 E101 — S1Ø T LINE C H

74LS04 E101 — S1Ø T LINE B H

S8 RESET L

74LS04 E101 — S1Ø T LINE A H

S9 CLK H
S9 PH4 L
S9 PH2 L

74LS22 E1Ø8 — 74LS74 E1Ø9 — 74LS1Ø E97

74LS22 E1ØØ — 74LS08 E1Ø7 — 74LS02 E1Ø8 — S1Ø TRDY H

+5V — R65 5.6K — C97 39PF — 9602 E1Ø6 150nS — S9 V H

74LS151 E92 — STB, DØ–D7, FØ, F1, S2 S1 SØ

74LS04 E101 — R63 18Ø — C95 22ØPF — 74LS00 E99 — τ = 75 NSEC

S9 V H

SG LD TBUF H — 74LS04 E86

74LS74 E1Ø9 — 74LS08 E1Ø7

+5V — R64 5.6K — C96 12ØPF — 9602 E1Ø6 300 nSEC

7474 E96 — 7474 E96

74LS00 E99 — 74LS04 E107 — 74LS02 E108 — S8 RESET H

74LS155 E83 — STBB STBA, DA DB, FA3 FA2 FA1 FAØ FB3 FB2 FB1 FBØ, S1 SØ

S1Ø DS Ø L
S1Ø DS 1 L
S1Ø DS 2 L
S1Ø DS 3 L
S1Ø DS 4 L
S1Ø DS 5 L
S1Ø DS 6 L
S1Ø DS 7 L

REVISIONS		
CHK	CHANGE NO.	REV.

(TRANSMITTER CONTROL)

TITLE	SIZE	CODE	NUMBER	REV.
8 LINE EIA ASYNCHRONOUS MUX (S1Ø)	D	DCS	M7819-Ø-1	L
SCALE — / — SHEET 10 OF 15	DIST.			

DEC FORM NO. DRD 138

MK

"THIS DRAWING AND SPECIFICATIONS, HEREIN, ARE THE PROPERTY OF DIGITAL EQUIPMENT CORPORATION AND SHALL NOT BE REPRODUCED OR COPIED OR USED IN WHOLE OR IN PART AS THE BASIS FOR THE MANUFACTURE OR SALE OF ITEMS WITHOUT WRITTEN PERMISSION.
COPYRIGHT © 1976, DIGITAL EQUIPMENT CORPORATION"

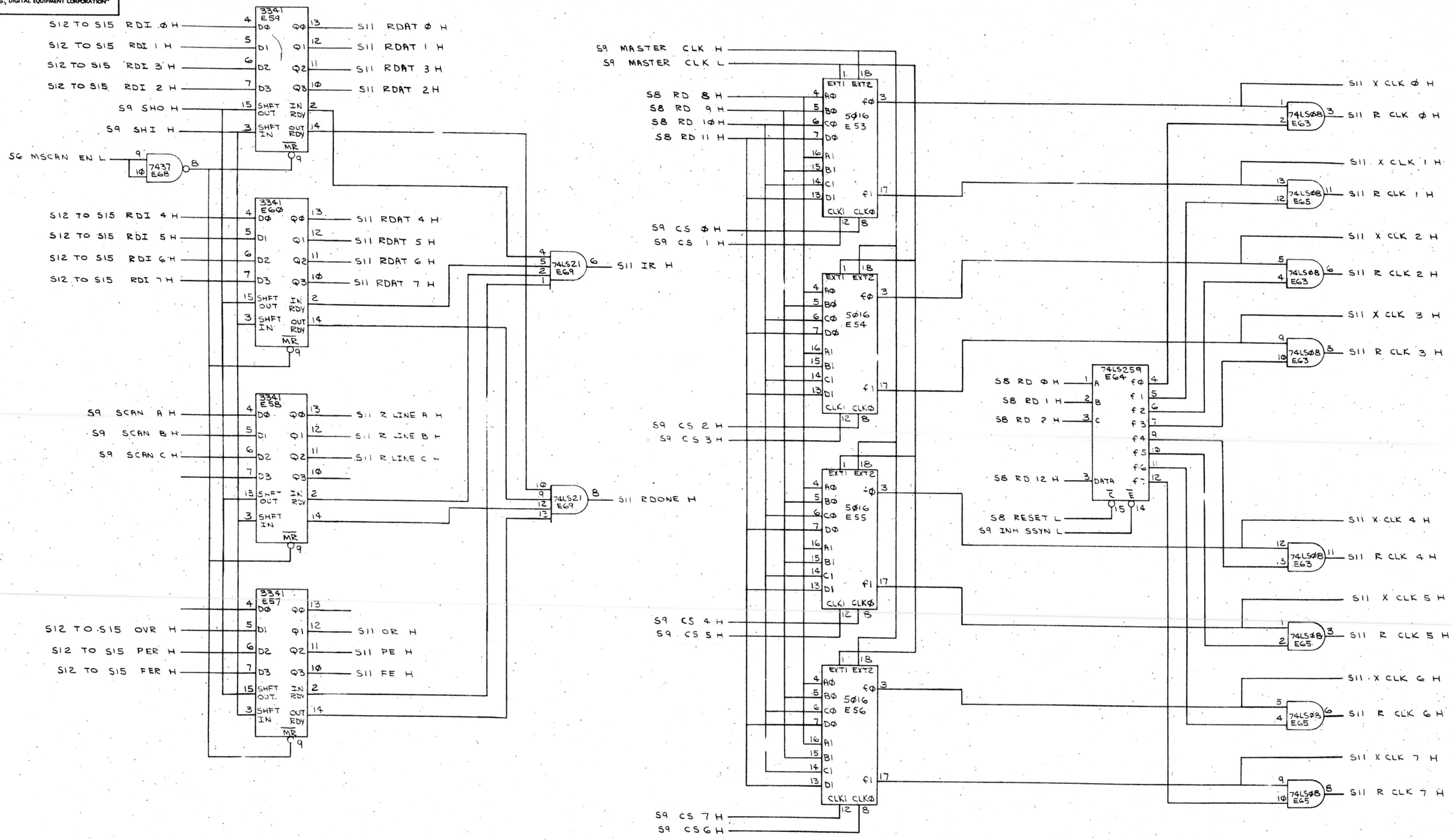

REVISIONS		
CHK	CHANGE NO.	REV.

(SILO AND UART CLOCKS)

TITLE	SIZE	CODE	NUMBER	REV.
8 LINE EIA ASYNCHRONOUS MUX (S11)	D	CS	M7819-Ø-1	L
SCALE — / — SHEET 11 OF 15	DIST.			

DEC FORM NO. 9D 138

MK

"THIS DRAWING AND SPECIFICATIONS, HEREIN, ARE THE PROPERTY OF DIGITAL EQUIPMENT CORPORATION AND SHALL NOT BE REPRODUCED OR COPIED OR USED IN WHOLE OR IN PART AS THE BASIS FOR THE MANUFACTURE OR SALE OF ITEMS WITHOUT WRITTEN PERMISSION.
COPYRIGHT © 1976, DIGITAL EQUIPMENT CORPORATION"

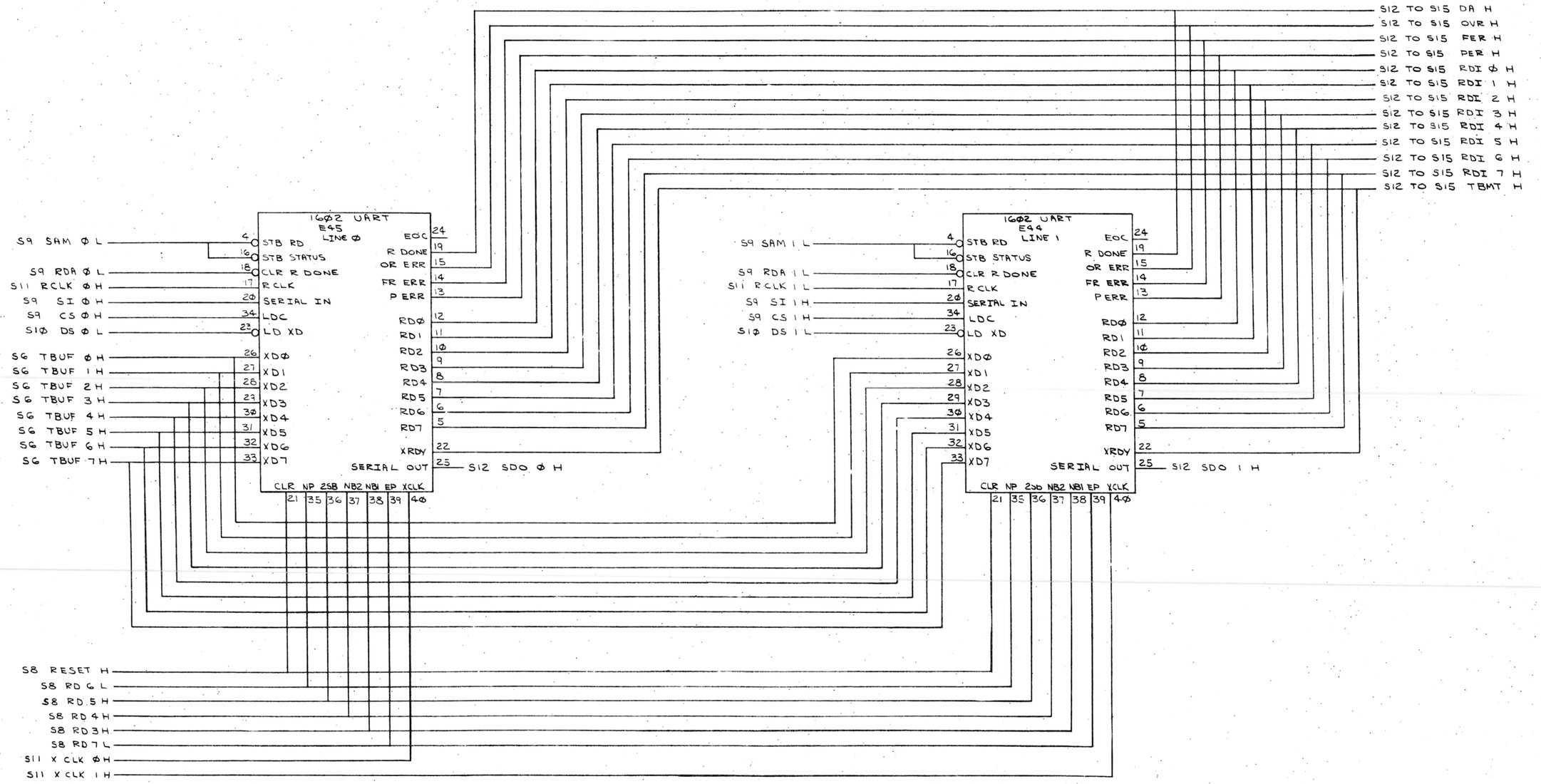

REVISIONS		
CHK	CHANGE NO.	REV.

(TRANSCEIVER LINES Ø & 1)

TITLE	SIZE	CODE	NUMBER	REV.
8 LINE EIA ASYNCHRONOUS MUX (S12)	D	CS	M7819-Ø-1	L
SCALE —/—/—	SHEET 12 OF 15	DIST.	MK	

"THIS DRAWING AND SPECIFICATIONS, HEREIN, ARE THE PROPERTY OF DIGITAL EQUIPMENT CORPORATION AND SHALL NOT BE REPRODUCED OR COPIED OR USED IN WHOLE OR IN PART AS THE BASIS FOR THE MANUFACTURE OR SALE OF ITEMS WITHOUT WRITTEN PERMISSION.
COPYRIGHT © 1976, DIGITAL EQUIPMENT CORPORATION"

S12 TO S15 DA H
S12 TO S15 OVR H
S12 TO S15 FER H
S12 TO S15 PER H
S12 TO S15 RDI Ø H
S12 TO S15 RDI 1 H
S12 TO S15 RDI 2 H
S12 TO S15 RDI 3 H
S12 TO S15 RDI 4 H
S12 TO S15 RDI 5 H
S12 TO S15 RDI 6 H
S12 TO S15 RDI 7 H
S12 TO S15 TBMT H

1602 UART
E48
LINE 2

S9 SAM 2 L — 4 STB RD
16 STB STATUS
S9 RDA 2 L — 18 CLR R DONE
S11 R CLK 2 H — 17 R CLK
S9 SI 2 H — 20 SERIAL IN
S9 CS 2 H — 34 LDC
S1Ø DS 2 L — 23 LD XD

SG TBUF Ø H — 26 XDØ
SG TBUF 1 H — 27 XD1
SG TBUF 2 H — 28 XD2
SG TBUF 3 H — 29 XD3
SG TBUF 4 H — 30 XD4
SG TBUF 5 H — 31 XD5
SG TBUF 6 H — 32 XD6
SG TBUF 7 H — 33 XD7

EOC 24
R DONE 19
OR ERR 15
FR ERR 14
P ERR 13
RDØ 12
RD1 11
RD2 10
RD3 9
RD4 8
RD5 7
RD6 6
RD7 5
X RDY 22
SERIAL OUT 25 — S13 SDO 2 H

CLR 21 | NP 35 | 2SB 36 | NB2 37 | NB1 38 | EP 39 | X CLK 4Ø

1602 UART
E46
LINE 3

S9 SAM 3 L — 4 STB RD
16 STB STATUS
S9 RDA 3 L — 18 CLR R DONE
S11 R CLK 3 H — 17 R CLK
S9 SI 3 H — 20 SERIAL IN
S9 CS 3 H — 34 LDC
S1Ø DS 3 L — 23 LD XD

26 XDØ
27 XD1
28 XD2
29 XD3
30 XD4
31 XD5
32 XD6
33 XD7

EOC 24
R DONE 19
OR ERR 15
FR ERR 14
P ERR 13
RDØ 12
RD1 11
RD2 10
RD3 9
RD4 8
RD5 7
RD6 6
RD7 5
X RDY 22
SERIAL OUT 25 — S13 SDO 3 H

CLR 21 | NP 35 | 2SB 36 | NB2 37 | NB1 38 | EP 39 | X CLK 4Ø

S8 RESET H
S8 RD 6 L
S8 RD 5 H
S8 RD 4 H
S8 RD 3 H
S8 RD 7 L
S11 X CLK 2 H
S11 X CLK 3 H

REVISIONS		
CHK	CHANGE NO.	REV.

(TRANSCEIVER LINES 2&3)

TITLE: 8 LINE EIA ASYNCHRONOUS MUX (S13)
SIZE D | CODE CS | NUMBER M7819-Ø-1 | REV L
SCALE — | SHEET 13 OF 15 | DIST.

DEC FORM NO. 9RD 138

MK

"THIS DRAWING AND SPECIFICATIONS, HEREIN, ARE THE PROPERTY OF DIGITAL EQUIPMENT CORPORATION AND SHALL NOT BE REPRODUCED OR COPIED OR USED IN WHOLE OR IN PART AS THE BASIS FOR THE MANUFACTURE OR SALE OF ITEMS WITHOUT WRITTEN PERMISSION.
COPYRIGHT © 1976, DIGITAL EQUIPMENT CORPORATION"

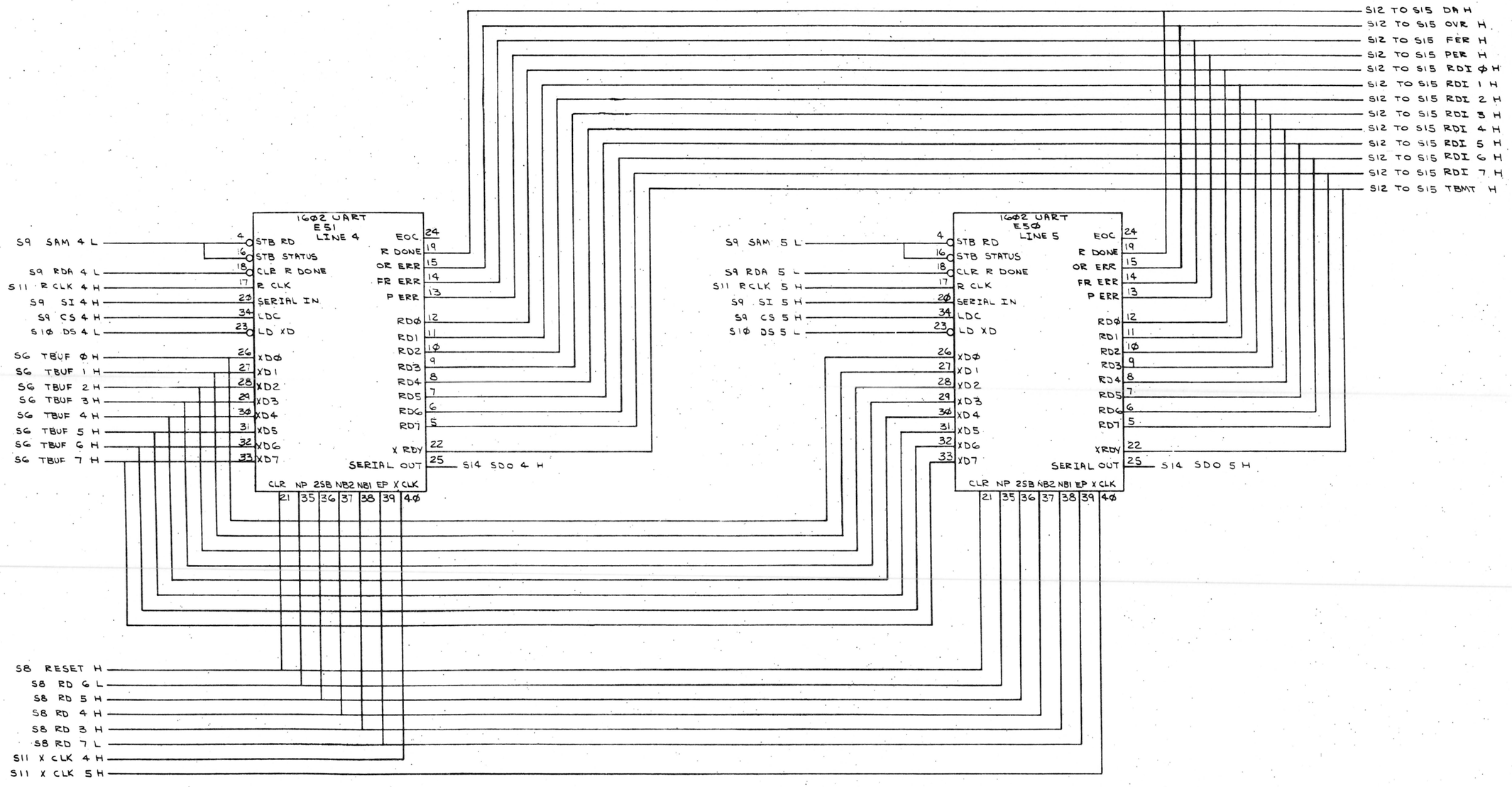

REVISIONS		
CHK	CHANGE NO.	REV.

TRANSCEIVER LINES 4 & 5

TITLE	SIZE	CODE	NUMBER	REV.
8 LINE EIA ASYNCHRONOUS MUX (S14)	D	CS	M7819-Ø-1	L
SCALE — / —	SHEET 14 OF 15	DIST.		

MK

DEC FORM NO. 120

"THIS DRAWING AND SPECIFICATIONS, HEREIN, ARE THE PROPERTY OF DIGITAL EQUIPMENT CORPORATION AND SHALL NOT BE REPRODUCED OR COPIED OR USED IN WHOLE OR IN PART AS THE BASIS FOR THE MANUFACTURE OR SALE OF ITEMS WITHOUT WRITTEN PERMISSION.
COPYRIGHT © 1976, DIGITAL EQUIPMENT CORPORATION"

S12 TO S15 DA H
S12 TO S15 OVR H
S12 TO S15 FER H
S12 TO S15 PER H
S12 TO S15 RDI Ø H
S12 TO S15 RDI 1 H
S12 TO S15 RDI 2 H
S12 TO S15 RDI 3 H
S12 TO S15 RDI 4 H
S12 TO S15 RDI 5 H
S12 TO S15 RDI 6 H
S12 TO S15 RDI 7 H
S12 TO S15 TBMT H

1602 UART
E47
LINE 6

S9 SAM 6 L → 4 STB RD
16 STB STATUS
S9 RDA 6 L → 18 CLR R DONE
S11 R CLK 6 H → 17 R CLK
S9 SI 6 H → 20 SERIAL IN
S9 CS 6 H → 34 LDC
S1Ø DS 6 L → 23 LD XD

SG TBUF Ø H → 26 XDØ
SG TBUF 1 H → 27 XD1
SG TBUF 2 H → 28 XD2
SG TBUF 3 H → 29 XD3
SG TBUF 4 H → 30 XD4
SG TBUF 5 H → 31 XD5
SG TBUF 6 H → 32 XD6
SG TBUF 7 H → 33 XD7

EOC 24
R DONE 19
OR ERR 15
FR ERR 14
P ERR 13
RDØ 12
RD1 11
RD2 10
RD3 9
RD4 8
RD5 7
RD6 6
RD7 5
X RDY 22
SERIAL OUT 25 → S15 SDO 6 H

CLR NP 2SB NB2 NBI EP X CLK
21 35 36 37 38 39 4Ø

1602 UART
E49
LINE 7

S9 SAM 7 L → 4 STB RD
16 STB STATUS
S9 RDA 7 L → 18 CLR R DONE
S11 R CLK 7 H → 17 R CLK
S9 SI 7 H → 20 SERIAL IN
S9 CS 7 H → 34 LDC
S1Ø DS 7 L → 23 LD XD

26 XDØ
27 XD1
28 XD2
29 XD3
30 XD4
31 XD5
32 XD6
33 XD7

EOC 24
R DONE 19
OR ERR 15
FR ERR 14
P ERR 13
RDØ 12
RD1 11
RD2 10
RD3 9
RD4 8
RD5 7
RD6 6
RD7 5
X RDY 22
SERIAL OUT 25 → S15 SDO 7 H

CLR NP 2SB NB2 NBI EP X CLK
21 35 36 37 38 39 4Ø

S8 RESET H
S8 RD 6 L
S8 RD 5 H
S8 RD 4 H
S8 RD 3 H
S8 RD 7 L
S11 X CLK 6 H
S11 X CLK 7 H

REVISIONS		
CHK	CHANGE NO.	REV.

DEC FORM NO. DRO 130

TRANSCEIVER LINES 6 & 7

TITLE: 8 LINE EIA ASYNCHRONOUS MUX (S15)
SIZE D | CODE CS | NUMBER M7819-Ø-1 | REV L
SCALE 1/1 | SHEET 15 OF 15 | DIST.

MK

digital EQUIPMENT CORPORATION
MAYNARD MASSACHUSETTS

DRAWING DIRECTORY

CUSTOMER PRINT SET INDEX

THIS IS PRINT SET

SEQUENCE		SEQUENCE	
DRAWING DIRECTORY	B-DD-H317-0	MFG PRINT SET	
H317 CABLE BOX ASSY	E-UA-H317-0-0	PACKAGING INSTRUCTION	A-PI-3700091-0-0
DJ-11 DIST. PANEL (EIA) CIRCUIT SCHEMATIC	D-CS-5410260-0-1		
DJ-11 DIST. PANEL (TTY) CIRCUIT SCHEMATIC	D-CS-5410262-0-1		
DV11 DIST. PANEL CIRCUIT SCHEMATIC	D-CS-5411153-0-1		
DZ11 DIST PANEL (EIA)	D-CS-5411928-0-1		
DZ11 DIST PANEL (TTY)	D-CS-5411974-0-1		
DZ32 DIST PANEL	D-CS-5413929-0-1		
H317 PARTS LIST	K-PL-H317-Ø-Ø		

UNIT VARIATIONS

VARIATION	TITLE	PRINT SET TYPE TI
H317-A	H317 CABLE BOX ASSY.	X
H317-B	H317 CABLE BOX ASSY.	X
H317-C	H317 CABLE BOX ASSY	X
H317-E	H317 CABLE BOX ASSY (EIA)	X
H317-F	H317 CABLE BOX ASSY (TTY)	X
H317-N	H317 CABLE BOX ASSY	X

REVISIONS		
DATE	CHG. NO.	REV
3-74	H317-3	A
2-75	H317-4	B
11-75	H317-5	C
12-76	H317-6	D
1-81	H317-8	E

USED ON OPTION/MODEL: H317

DRN. P. MARCOTTE	DATE 11/1/2	TITLE: H317 CABLE BOX ASSY.
CHK'D. C. Teschner	DATE 1/29/73	
PROJ ENG.	DATE 1/24/73	
PROD.	DATE 1/24/73	
FIELD SERV.	DATE 1-25-73	
SHEET 1 OF 3		SIZE B; CODE DD; NUMBER H317-Ø; REV E; DIST

DRB 106

DEC 16—(325)—1062—1—N871

MK

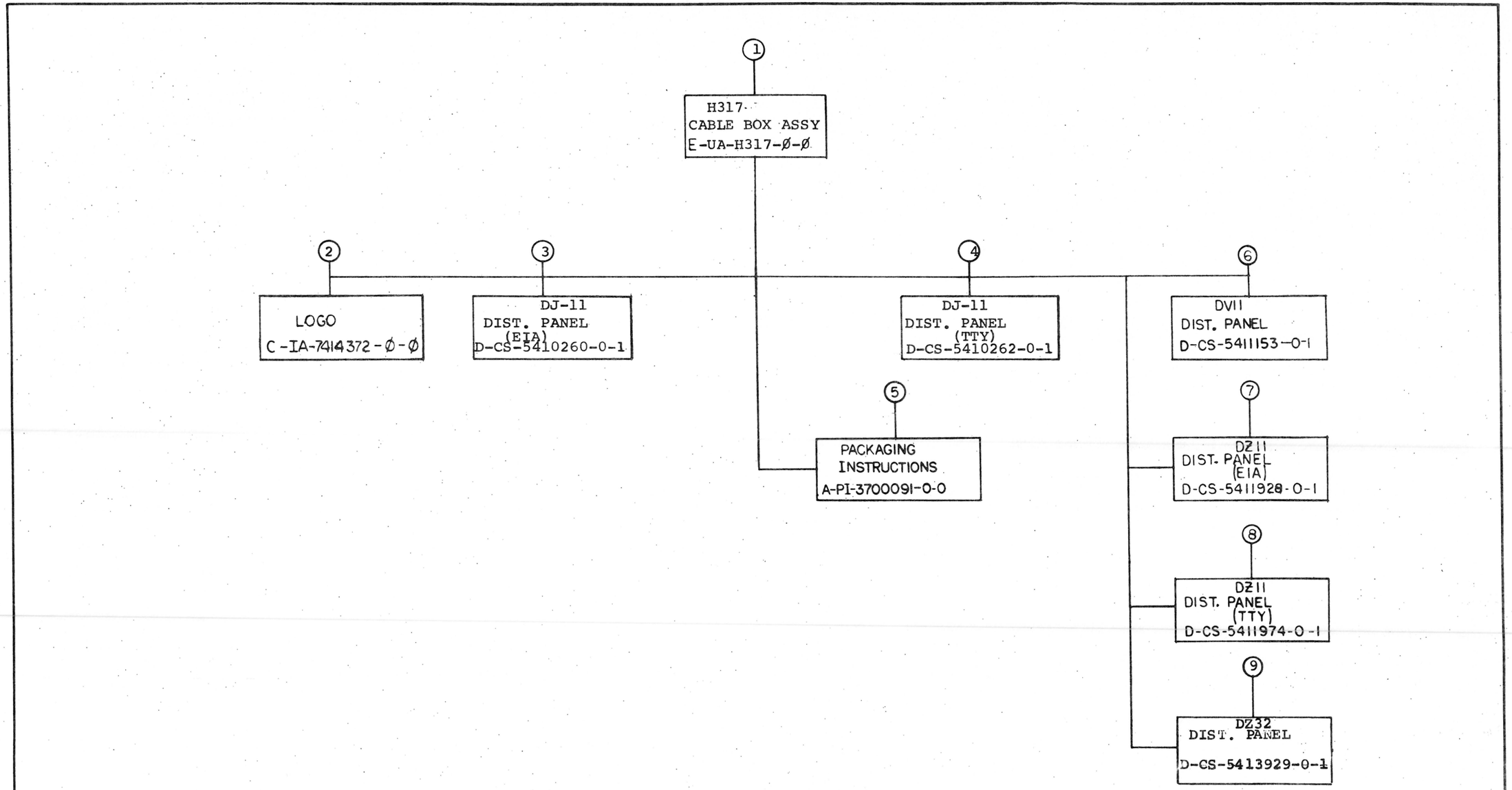

TITLE			SIZE	CODE	NUMBER	REV
H317 CABLE BOX ASSY.	SHEET 2 OF 3		B	DD	H317-Ø	E

DRB 107
DEC 16—(325)—1062—3—N871

MK

ELECTRICAL

CUSTOMER PRINT SET -1	DEPOT SET	FIND NO.	DRAWING NO.	REV	NO OF SHT	DESCRIPTION	OPTION NO.
X		1	E-UA-H317-Ø-Ø	C	1	H317 CABLE BOX ASSY	
			K-PL-H317-Ø-Ø			H317 PARTS LIST	
X		2	E-IA-7410667-0-0		1	COVER, CABLE BOX	
X		3	D-CS-5410260-0-1	#	3	DJ-11 DIST. PANEL (EIA)	
			B-MH-5410260-0-6		1	MODULE ECO HISTORY	
X		4	D-CS-5410262-0-1	#	6	DJ-11 DIST. PANEL (TTY)	
			B-MH-5410262-0-6		1	MODULE ECO HISTORY	
X		6	D-CS-5411153-0-1	#	3	DV11 DIST PANEL	
			B-MH-5411153-0-6	#	1	MODULE ECO HISTORY	
X		7	D-CS-5411928-0-1	#	2	DZ11 DIST. PANEL (EIA)	
			B-MH-5411928-0-6	#	1	MODULE ECO HISTORY	
X		8	D-CS-5411974-0-1	#	1	DZ11 DIST. PANEL (TTY)	
			B-MH-5411974-0-6	#	1	MODULE ECO HISTORY	
X		9	D-CS-5413929-0-1			DZ32 DIST PANEL	

MECHANICAL

CUSTOMER PRINT SET -1	DEPOT SET	FIND NO.	DRAWING NO.	REV	NO OF SHT	DESCRIPTION	OPTION NO.
		1	E-UA-H317-Ø-Ø		1	H317 CABLE BOX ASSY	
			E-IA-7416243-0-0		1	H317 MTG PLATE	
			D-MD-7416248-0-0		1	BAR SLIDE	
			A-DC-7410681-0-0		1	DECAL, TERM BLOCK	
			D-PS-1213318-0-0		1	BAR, CABLE HOLDOWN	
			D-PS-1212632-0-0		1	COVER CABLE BOX PLASTIC	
		2	C-IA-7414372-0-0		1	LOGO	
			A-SS-7414372-0-1		1	SILKSCREEN H317-A	
			A-SS-7414372-0-2		1	SILKSCREEN H317-B	
			A-SS-7414372-0-3		1	SILKSCREEN H317-C	
			A-SS-7414372-0-6		1	SILKSCREEN H317-E	
			A-SS-7414372-0-7		1	SILKSCREEN H317 F	
		3	D-CS-5410260-0-1	#	3	DJ-11 DIST. PANEL (EIA)	
			K-CO-5410260-0-4		1	X-Y COORDINATE HOLE LOCATION	
			D-AH-5410260-0-5		1	ASSY/DRILLING HOLE LAYOUT	
			B-MH-5410260-0-6		1	MODULE ECO HISTORY	
		4	D-CS-5410262-0-1	#	6	DJ-11 DIST. PANEL (TTY)	
			K-CO-5410262-0-4		1	X-Y COORDINATE HOLE LOCATION	
			D-AH-5410262-0-5		1	ASSY/DRILLING HOLE LAYOUT	
			B-MH-5410262-0-6		1	MODULE ECO HISTORY	
X		5	A-PI-3700091-0-0		2	PACKAGING INSTRUCTIONS	
			A-PS-9905315-0-0		2	OUTER CARTON	
			A-PS-9905317-0-0		2	LAMINATED TRAY	
			A-PS-9905316-0-0		2	CORRUGATED PAD	
		6	D-CS-5411153-0-1	#	3		
			K-CO-5411153-0-4		1		
			D-AH-5411153-0-5		1		
			B-MH-5411153-0-6		1		
		7	D-CS-5411928-0-1	#	2	DZ11 DIST. PANEL (EIA)	
			K-CO-5411928-0-4		1	X Y COORDINATE HOLE LOC.	
			E-MD-5011927-0-0		4	ASSY/DRILLING HOLE LAYOUT	
			B-MH-5411928-0-6		1	MODULE ECO HISTORY	
		8	D-CS-5411974-0-1	#	1	DZ11 DIST. PANEL (TTY)	
			K-CO-5411974-0-4		1	X-Y COORDINATE HOLE LOC.	
			D-MD-5011973-0-0		3	ASSY/DRILLING HOLE LAYOUT	
			B-MH-5411974-0-6		1	MODULE ECO HISTORY	

TITLE	SHEET	SIZE	CODE	NUMBER	REV
H317 CABLE BOX ASSY.	3 OF 3	B	DD	H317-Ø	E

DRB 108

DEC 16—(325)—1062—2—N871

MK

"THIS DRAWING AND SPECIFICATIONS, HEREIN, ARE THE PROPERTY OF DIGITAL EQUIPMENT CORPORATION AND SHALL NOT BE REPRODUCED OR COPIED OR USED IN WHOLE OR IN PART AS THE BASIS FOR THE MANUFACTURE OR SALE OF ITEMS WITHOUT WRITTEN PERMISSION.
COPYRIGHT © 1978, DIGITAL EQUIPMENT CORPORATION"

NOTES

1. IF ITEM #11 IS USED THE DECAL (ITEM #24) IS TO BE APPLIED TO THE INSIDE SURFACE OF COVER ITEM #20
2. PRIOR TO MTG. DIST. PANEL, ADHERE 10 NYLON WASHER (ITEM #21) TO STANDOFFS ON MTG PANEL (ITEM #1) USING ECO BOND ADHESIVE (ITEM #16) AND ALLOW TO DRY. USE REMAINING 8 WASHERS TO MOUNT PANEL NOT REQUIRED FOR H317-N.
3. USE ASSY TOOL #9606416 TO POSITION LOGO ITEM #4 THRU #5 ON COVER (ITEM #20)
4. ON H317-A USE UPPER HOLES, ON H317-E USE MIDDLE HOLES.
5. ON H317-N USE MIDDLE HOLES AND END HOLES.

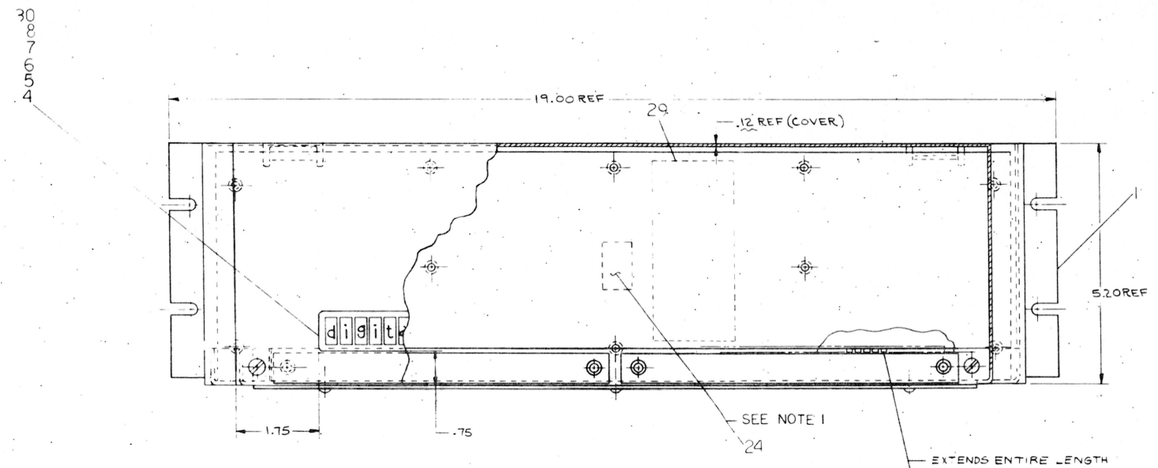

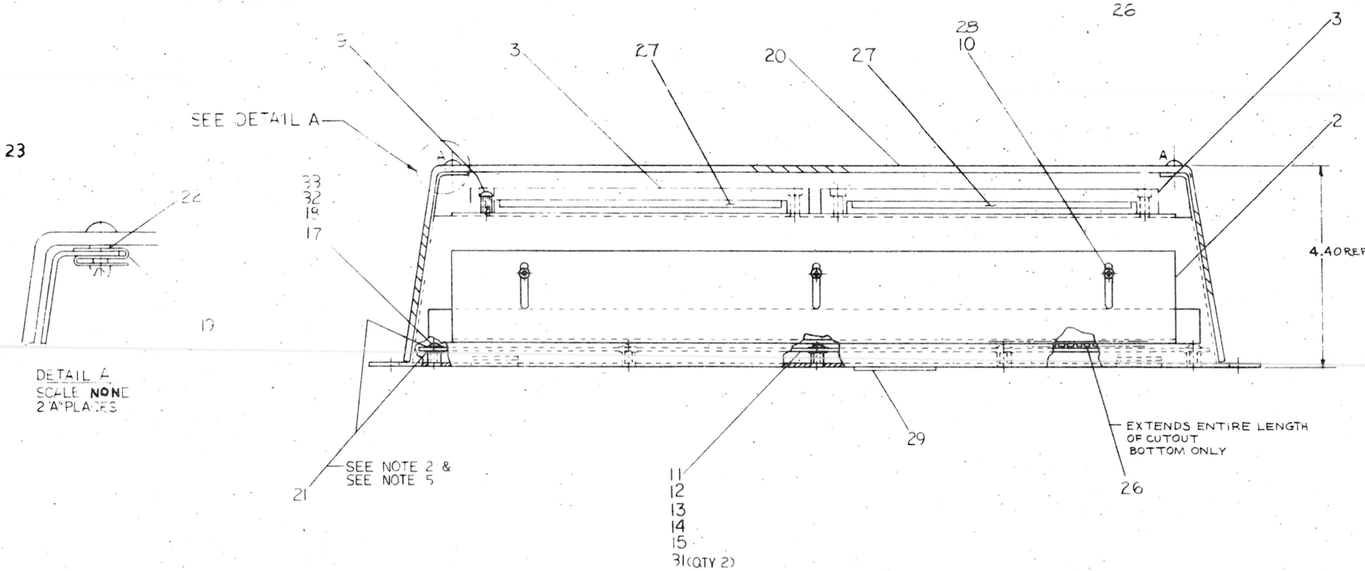

CAUTION: OFF SHEET PARTS LIST EXISTS. REFER TO K-PL-H317-0-0.

H317-F	H317-E	H317-C	H317-B	H317-A	DESCRIPTION	DWG./PART NO.	ITEM NO.
1	1	1	1	1	LABEL, ID	9610073-00	29
3	3	3	3	3	LOCKWASHER, INT #6	9006633	28
2	2	2	2	2	FOAM, ADHESIVE .12 X .5 X 6.0	9009087-1	27
A/R	A/R	A/R	A/R	A/R	GROMMET ALLIGATOR	9007035	26
1	1	1	1	1	PACKING INSTRUCTIONS	A-PI-3700091-0-0	25
–	–	–	1	–	DECAL	A-DC-7410681-0-0	24
2	2	2	2	2	FASTENER STUD, ¼ TURN	9003343-00	23
2	2	2	2	2	RETAINER, SPLIT RING	9008200	22
18	18	20	20	16	WASHER, NYLON #8	9006708	21
1	1	1	1	1	COVER, CABLE BOX PLASTIC	D-PS-1212632-0-0	20
2	2	2	2	2	RECEPTACLE CLIPON	9008196	19
8	8	10	10	8	LOCKWASHER INT #8	9006634	18
8	8	10	10	8	SCR, PHL HD 8-32 X .25 LG.	9006035-1	17
A/R	A/R	A/R	A/R	A/R	ECOBOND ADHESIVE	9009152	16
–	–	1	–	–	DVII DIST. PANEL	D-CS-5411153-0-1	15
1	–	–	–	–	DZII DIST PANEL (TTY)	D-CS-5411974-0-1	14
–	1	–	–	–	DZII DIST PANEL (EIA)	D-CS-5411928-0-1	13
–	–	–	1	–	DJII DIST. PANEL (EIA)	D-CS-5410260-0-1	12
–	–	–	–	1	DJII DIST PANEL (TTY)	D-CS-5410262-0-1	11
3	3	3	3	3	SCR, PHL PAN HD 6-32 X .25 LG.	9006020-1	10
4	4	4	4	4	SCR, PHL PAN HD 6-32 X .62 LG.	9006025-1	9
1	–	–	–	–	LOGO H317-F	C-IA-7414372-6-0	8
–	1	–	–	–	LOGO H317-E	C-IA-7414372-5-0	7
–	–	1	–	–	LOGO H317-C	C-IA-7414372-2-0	6
–	–	–	1	–	LOGO H317-B	C-IA-7414372-1-0	5
–	–	–	–	1	LOGO H317-A	C-IA-7414372-0-0	4
2	2	2	2	2	BAR, CABLE HOLD DOWN	D-PS-1213318-00	3
1	1	1	1	1	BAR, SLIDE	D-MD-7416248-0-0	2
1	1	1	1	1	H317 MOUNTING PLATE	E-IA-7416243-0-0	1

QUANTITY & VARIATION

UNLESS OTHERWISE SPECIFIED DIMENSIONS ARE IN INCHES

ANGLES ± 30'	CLASS OF ACCURACY (CHECK ONE)	NOMINAL DIMENSION RANGE INCHES: OVER 0 TO .5	OVER .5 TO 1.2	OVER 1.2 TO 4.0	OVER 4.0 TO 12.0	OVER 12.0 TO 40.0	OVER 40.0 TO 80.0
SURFACE QUALITY IN MICROINCHES	MEDIUM ☐	±.004	±.005	±.012	±.016	±.024	±.04
	PREFERRED ☐	±.012	±.010	±.020	±.04	±.060	±0.1

THIRD ANGLE PROJECTION

REMOVE BURRS AND BREAK SHARP CORNERS

DO NOT SCALE DWG

MATERIAL: SEE PARTS LIST

FINISH

DRN. WM Maher 10 Feb 78
CHK'D. R Harrington 6 Oct 78
ENG. R Harrington 6 Oct 78
PROJ. ENG. R Harrington 6 Oct 78
PROD. R Harrington 6 Oct 78
NEXT HIGHER ASSY. B-DD-H317-0

FIRST USED ON: H317

digital

TITLE: H317 CABLE BOX ASSY

SIZE E | CODE UA | NUMBER H317-0-0 | REV. J | SCALE 1/1 | SHEET 1 OF 1 | DIST.

REVISIONS			
ZONE	CHANGE NO.	REV.	
	H317-0 TOOLING RELEASE AS PLOTTED & PER SPEC	F	T. REILLY 10 Feb 78
	H317-H MODEL	H	R. HARRINGTON 22 Aug 78
	H317-J MODEL	J	R. HARRINGTON 6 Oct 78

DEC FORM NO. DRG 1600-0

SIZE	CODE	NUMBER	REV.
B	DD	5411928-0-0	C

DRAWING NO.	NO. OF SHTS	PART NO.	DESCRIPTION	REVISIONS	
D-CS-5411928-0-1	2		CIRCUIT SCHEMATIC	B	C
B-MH-5411928-0-6	1		MODULE ECO HISTORY	*	A
E-UA-5411928-0-0	3		DZ11 EIA DISTRIBUTION PANEL	B	B
		5011927	ETCHED BOARD	C	C
5411928-0-L	1		P.C. DESIGN DATA BASE	REF	-
5411928-0-PL	1		INSERTION P/L DATA BASE	REF	-
B-PL-5411928-0-0	1		PARTS LIST	B	B
E-MD-5011927-0-0	4		DRILL & ETCH DRAWING	B	B

NOTES:

REVISIONS		
REV.	CHG NO.	DATE
C	00001	3-30-76

"THIS DRAWING AND SPECIFICATIONS, HEREIN, ARE THE PROPERTY OF DIGITAL EQUIPMENT CORPORATION AND SHALL NOT BE REPRODUCED OR COPIED OR USED IN WHOLE OR IN PART AS THE BASIS FOR THE MANUFACTURE OR SALE OF ITEMS WITHOUT WRITTEN PERMISSION.
COPYRIGHT © 1976, DIGITAL EQUIPMENT CORPORATION"

digital

USED ON OPTION/MODEL

DRN. SHETRAWSKI	3-22-76	
CHK'D SHETRAWSKI	3-22-76	
ENG. Robert Sommer	3-26-76	
PROD. R. Wall	3-26-76	

TITLE: DZ11 EIA DISTRIBUTIØN PANEL

SIZE	CODE	NUMBER	REV.
B	DD	5411928-0	C

SHEET 1 OF 1

DRB 126 EN-01149-16-N176(325)

DIGITAL EQUIPMENT CORPORATION

PARTS LIST

MADE BY R. A. CORMIER	CHECKED R. A. Cormier	SECTION 1
DATE 2-12-76	DATE 3-24-76	
ENG Robert A. Cormier	PROD R. Wall	ISSUED SECTION 1
DATE 3-26-76	DATE 3-26-76	

NOTES:

ITEM NO.	DRAWING NO.	PART NO.	DESCRIPTION	QUANTITY / VARIATION	REF DESIGNATION
1	E-MD-5011927-0-0	5011927	ETCHED CIRCUIT BOARD	1	
2		1209941-03	LATCH, LEFT FOR RT. ANG. HEADER	2	
3		1209941-04	LATCH, RIGHT FOR RT. ANG. HEADER	2	
4		1209941-07	CONN. 50P. RT. ANG.HEADER	2	J18, J20
5		1205886-01	CONN. D-SUB MIN W/PC TERM	16	J1-J16
6		9009113-10	STANDOFF P.C. BOARD 4-40 X .187	32	
7		9008451	SCREWLOCK D20418-2 4-40 X .312	32	
8		9009185	JUMPER, WIRE INSULATED	80	W1-W80

E.C.O. NO.

"THIS DRAWING AND SPECIFICATIONS, HEREIN, ARE THE PROPERTY OF DIGITAL EQUIPMENT CORPORATION AND SHALL NOT BE REPRODUCED OR COPIED OR USED IN WHOLE OR IN PART AS THE BASIS FOR THE MANUFACTURE OR SALE OF ITEMS WITHOUT WRITTEN PERMISSION COPYRIGHT © 1976 . DIGITAL EQUIPMENT CORPORATION"

TITLE: DZ11 EIA DISTRIBUTION PANEL

ASSY NO. E-UA-5411928-0-0

SHEET 1 OF 1

SIZE	CODE	NUMBER	REV.
B	PL	5411928-0-0	B

INSERTION PARTS LIST DATA BASE REV

"THIS DRAWING AND SPECIFICATIONS, HEREIN, ARE THE PROPERTY OF DIGITAL EQUIPMENT CORPORATION AND SHALL NOT BE REPRODUCED OR COPIED OR USED IN WHOLE OR IN PART AS THE BASIS FOR THE MANUFACTURE OR SALE OF ITEMS WITHOUT WRITTEN PERMISSION.
COPYRIGHT © '76 DIGITAL EQUIPMENT CORPORATION"

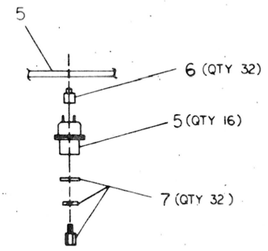

VIEW A-A
(16 PLACES)

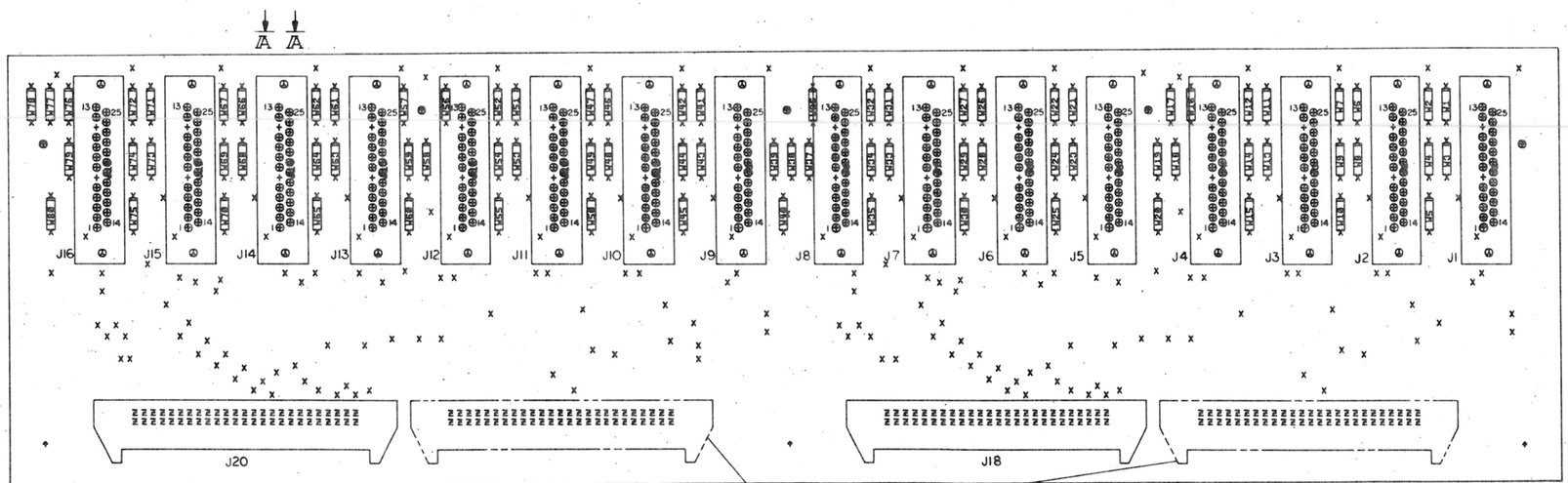

NOTES:
1. BOARD MUST BE DRILLED ON TRUE DRILL MACHINE.
2. .166 HOLES ARE CRITICAL.
3. CONN. BLOCKS IN PHANTOM ARE OPTIONAL.

CHG	CHANGE NO.	REV

ETCH REV. C
P.C. DESIGN DATA BASE REV. C

SIGNATURES	DATE
DRAWN	
CHK'D	
ENG.	
PROJ. ENG.	
PROD.	

digital

TITLE PANEL, EIA DISTRIBUTION

SCALE 2/1 | SHT. 1 OF 3 | SIZE E | CODE UA | NUMBER 5411928-0-0 | REV B

NEXT HIGHER ASSY. B-DD-5411928-0-0

CATALOG NUMBER EIA 5411928-0-0 REV B

...ING AND SPECIFICATIONS, HEREIN, ARE THE ... OF DIGITAL EQUIPMENT CORPORATION AND SHALL ... REPRODUCED OR COPIED OR USED IN WHOLE OR IN ... AS THE BASIS FOR THE MANUFACTURE OR SALE OF ... WITHOUT WRITTEN PERMISSION
COPYRIGHT © 1972 DIGITAL EQUIPMENT CORPORATION

L1

MS40550 5011927C 5411928

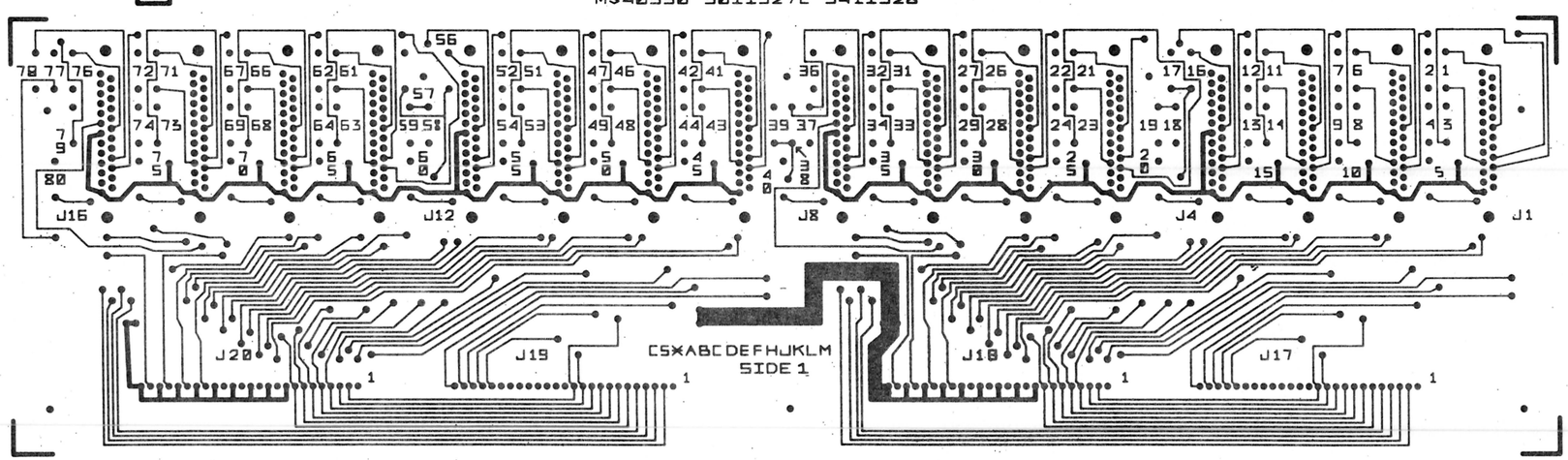

REVISIONS		
CHK	CHANGE NO.	REV.

TITLE	SIZE	CODE	NUMBER	REV.
EIA DISTRIBUTION PANEL	E	UA	5411928-0-0	B
SCALE	SHEET 2 OF 3	DIST.		

THIS DRAWING AND SPECIFICATIONS, HEREIN, ARE THE PROPERTY OF DIGITAL EQUIPMENT CORPORATION AND SHALL NOT BE REPRODUCED OR COPIED OR USED IN WHOLE OR IN PART AS THE BASIS FOR THE MANUFACTURE OR SALE OF ITEMS WITHOUT WRITTEN PERMISSION
COPYRIGHT © 1976 DIGITAL EQUIPMENT CORPORATION

L2

EIA DISTRIBUTION PANEL
5411928 5011927C

MS-10550

SIDE 2

REVISIONS		
CHR.	CHANGE NO.	REV.

TITLE: EIA DISTRIBUTION PANEL			SIZE: E	CODE: UA
SCALE	SHEET 3 OF 3		DIST.	*NUMBER: 5411928 0-0
				REV: B

"THIS DRAWING AND SPECIFICATIONS, HEREIN, ARE THE PROPERTY OF DIGITAL EQUIPMENT CORPORATION AND SHALL NOT BE REPRODUCED OR COPIED OR USED IN WHOLE OR IN PART AS THE BASIS FOR THE MANUFACTURE OR SALE OF ITEMS WITHOUT WRITTEN PERMISSION.
COPYRIGHT © 1970, DIGITAL EQUIPMENT CORPORATION"

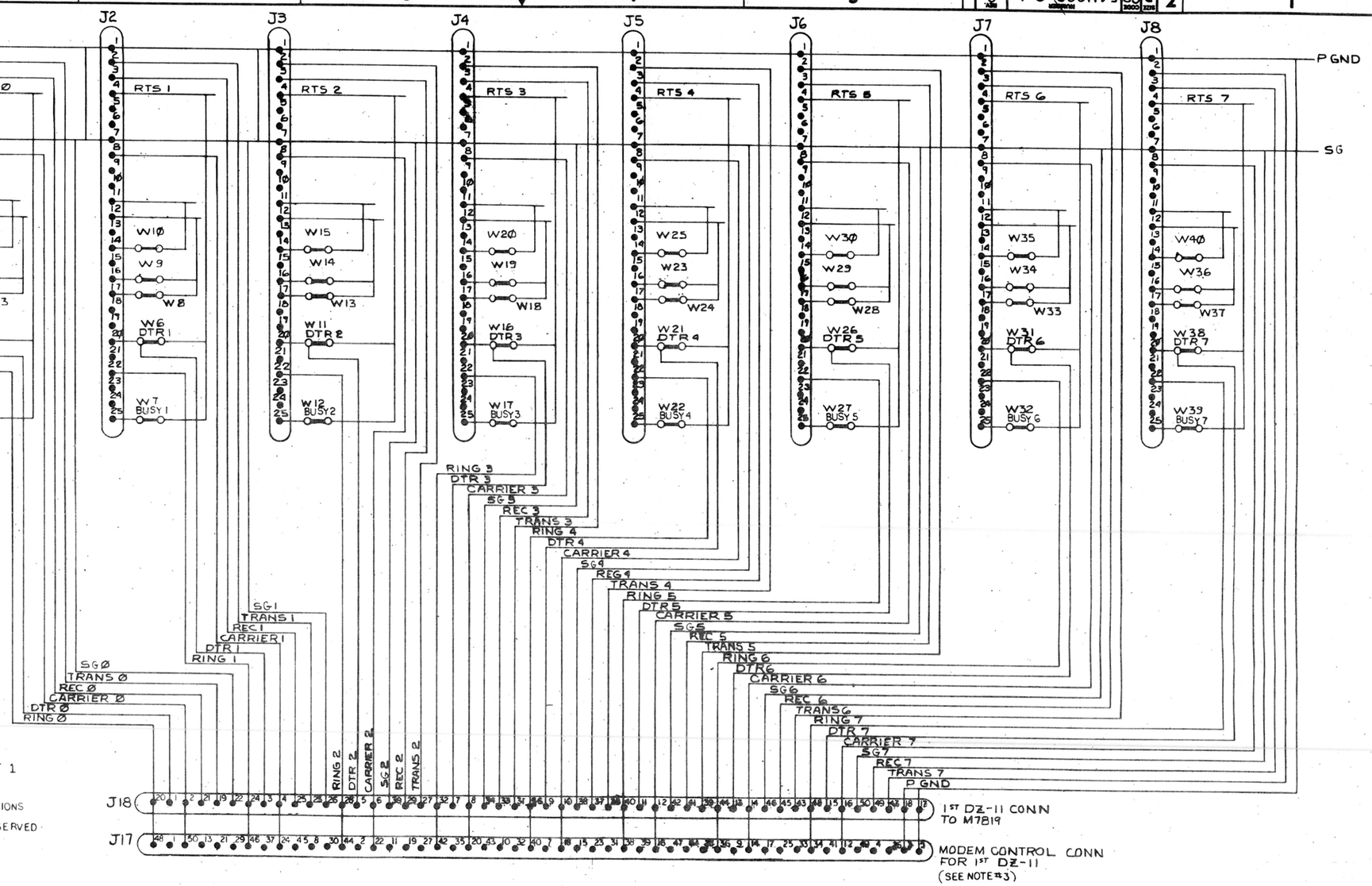

NOTES:

1. EXCEPT FOR PGND, SIGNALS ON SHT 1 DO NOT CONNECT WITH SIGNALS ON SHT 2.
2. ALL JUMPERS ARE NORMALLY "IN". THEY ARE OPTIONS RESERVED FOR FUTURE USE.
3. J17 AND J19 ARE NOT INSTALLED. THEY ARE RESERVED FOR FUTURE USE.

REVISIONS			
CHK	CHANGE NO.	ORIGINATED	REV.
-	-	5411928-00001	C
		H. Dimmock 6-4-76	
		R.A. CORMIER	

DEC FORM NO. DRD 102-D

DRN.		NOV 19 1975	FIRST USED ON H317E
CHK'D		11/24/75	digital
ENG.		3-26-76	TITLE DZ11 EIA DIST PANEL
PROJ.		3-26-76	
PROD.	R. Wall	3-26-76	
NEXT HIGHER ASSY.			
E-AH-5411928-0-5			SIZE D CODE CS NUMBER 5411928-0-1 REV. G
SCALE			
SHEET 1 OF 2			DIST.

SIZE D CODE CS NUMBER 5411928-0-1 REV. C

"THIS DRAWING AND SPECIFICATIONS, HEREIN, ARE THE PROPERTY OF DIGITAL EQUIPMENT CORPORATION AND SHALL NOT BE REPRODUCED OR COPIED OR USED IN WHOLE OR IN PART AS THE BASIS FOR THE MANUFACTURE OR SALE OF ITEMS WITHOUT WRITTEN PERMISSION.
COPYRIGHT © 1975 DIGITAL EQUIPMENT CORPORATION"

1ST DZ-11 CONNECTIONS

J9 J10 J11 J12 J13 J14 J15 J16

RTS Ø RTS 1 RTS 2 RTS 3 RTS 4 RTS 5 RTS 6 RTS 7

P GND

SG

W45 W44 W43 W41 DTRØ W42 BUSY Ø

W5Ø W49 W48 W46 DTR 1 W47 BUSY 1

W55 W54 W53 W51 DTR 2 W52 BUSY 2

W6Ø W59 W58 W56 DTR 3 W57 BUSY 3

W65 W64 W63 W61 DTR 4 W62 BUSY 4

W7Ø W69 W68 W66 DTR 5 W67 BUSY 5

W75 W74 W73 W71 DTR 6 W72 BUSY 6

W8Ø W79 W78 W76 DTR 7 W77 BUSY 7

RING Ø DTR Ø CARRIER Ø REC Ø TRANS Ø SGØ

RING 1 DTR 1 CARRIER 1 REC 1 TRANS 1 SG1

RING 2 DTR 2 CARRIER 2 SG2 REC 2 TRANS 2

RING 3 DTR 3 CARRIER 3 SG 3 REC 3 TRANS 3

RING 4 DTR 4 CARRIER 4 SG 4 REC 4 TRANS 4

RING 5 DTR 5 CARRIER 5 SG 5 REC 5 TRANS 5

RING 6 DTR 6 CARRIER 6 SG 6 REC 6 TRANS 6

RING 7 DTR 7 CARRIER 7 SG 7 REC 7 TRANS 7

P GND

J2Ø — 2ND DZ-11 CONN TO M7819

J19 — MODEM CONTROL CONN. FOR 2ND DZ-11 (SEE NOTE #3)

REVISIONS		
CHK	CHANGE NO.	REV.

DEC FORM NO. DRO 138

TITLE	SIZE	CODE	NUMBER	REV.
DZ11 EIA DIST PANEL	D	CS	5411928-Ø-1	C
SCALE — SHEET 2 OF 2	DIST.			

5411928-0-1 C

"THIS DRAWING AND SPECIFICATIONS, HEREIN, ARE THE PROPERTY OF DIGITAL EQUIPMENT CORPORATION AND SHALL NOT BE REPRODUCED OR COPIED OR USED IN WHOLE OR IN PART AS THE BASIS FOR THE MANUFACTURE OR SALE OF ITEMS WITHOUT WRITTEN PERMISSION. COPYRIGHT © 1974, DIGITAL EQUIPMENT CORPORATION"

LEGEND	
NUMBER	DIM. "X" VAR.
BCØ5W - Ø2	2 FT. ± 1 IN.
BCØ5W - Ø4	4 FT. ± 1 IN.
BCØ5W - 15	15 FT. ± 3 IN.
BCØ5W - 8	8 FT. ± 2 IN.
BCØ5W - 25	25 FT. ± 3 IN
BCØ5W - 10	10 FT. ± 2 IN.

NOTE
1. THIS CABLE IS POINT TO POINT. PIN #1 TO PIN #50 AND PIN #2 TO PIN #49 ETC., ETC..
2. STRIP BACK SHIELDING APPROX 1" INCH

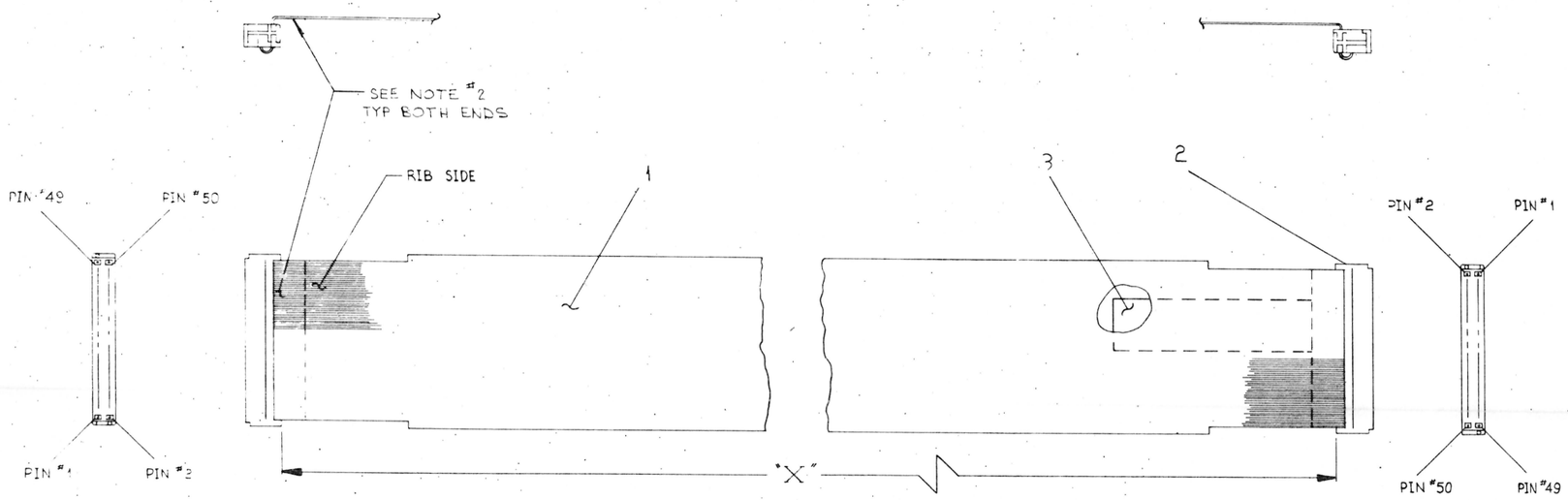

QTY.	DESCRIPTION	PART NO.	ITEM NO.
1	LABEL, CABLE IDENTIFICATION	3616073-00	3
2	CABLE CONN., 50 COND. FLUTE	1211664	2
1	CABLE, 50 COND FLATSHIELDED	1700004-01	1

PARTS LIST

FIRST USED ON OPTION/MODEL: KC341-B

DIMENSIONAL TOLERANCE
DIMENSIONS ARE MILLIMETERS / INCHES UNLESS OTHERWISE SPECIFIED

MILLIMETERS	INCHES	ANGLES
X.XX = ±0.10	.XXX = ±.005	±0° 30'
X.X = ±0.5	.XX = ±.02	
X = ±2	X = ±.1	

THIRD ANGLE PROJECTION

REMOVE BURRS AND BREAK SHARP CORNERS SURFACE QUALITY ✓

MATERIAL: SEE PARTS LIST

FINISH: ——

DRN. M. Sichel — DATE 5-15-74
CHK'D. — DATE 17
ENG. — DATE
PROJ. ENG. — DATE
PROD. — DATE

NEXT HIGHER ASSY.

SCALE: NONE
SHEET 1 OF 1

digital

TITLE: 50 CONDUCTOR SIGNAL CABLE (BCØ5W)

SIZE D | CODE IA | NUMBER BCØ5W-Ø-Ø | REV. F

DIST.

MK

REVISIONS

CHK	CHANGE NO.	REV.
	BCØ5W-00001	A
	BCØ5W-00002	B
	BCØ5W-MR003	C
	BCØ5W-MR004	D
	BCØ5W MK005	E
	BCØ5W-MK006	F

J. CYR
J. CYR
J. CYR
JOHN CYR
R. RANDO
B. Hanlon 2 Jan 79
W. DUNHAM

"THIS DRAWING AND SPECIFICATIONS, HEREIN, ARE THE PROPERTY OF DIGITAL EQUIPMENT CORPORATION AND SHALL NOT BE REPRODUCED OR COPIED OR USED IN WHOLE OR IN PART AS THE BASIS FOR THE MANUFACTURE OR SALE OF ITEMS WITHOUT WRITTEN PERMISSION.
COPYRIGHT © 1976, DIGITAL EQUIPMENT CORPORATION"

NOTES:
1. * THE BCØ5D, BCØ3M & BCØ3P CABLES ARE NOT INCLUDED IN THE DZ11 OPTION AND MUST BE ORDERED SEPARATELY.

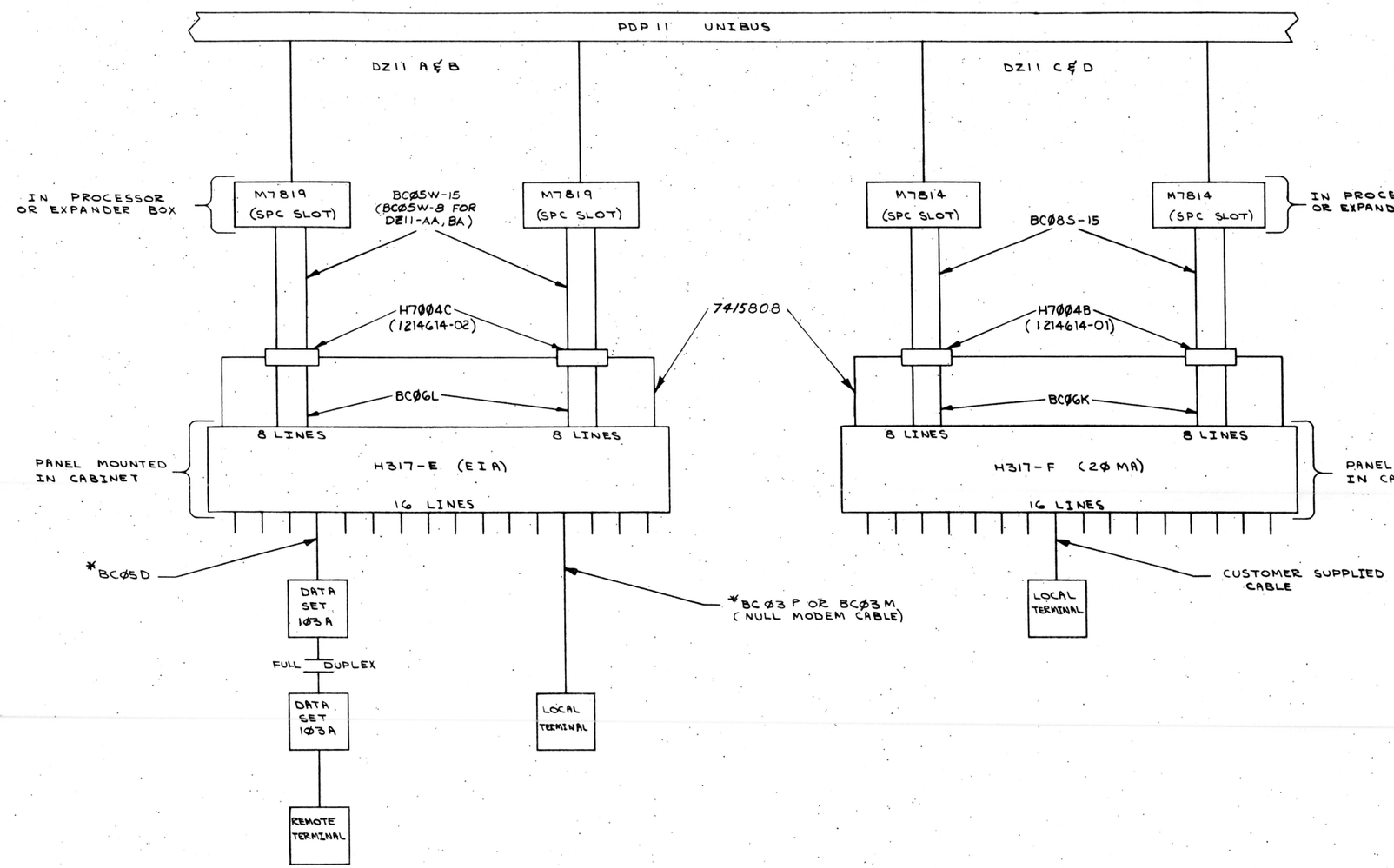

REVISIONS			
CHK	CHANGE NO.	REV.	
JC	DZ11-00003	A	22 August 77
D Benitez			R. CORMIER
Approved for release	DZ11-MK005	B	23-May-78
Ken Hallenbeck			R.CORMIER
Approved for release	DZ11-MK006	C	19 May 78
D. Benitez			R.CORMIER
Approved for release			10-Oct-78

DEC FORM NO. DRD 102-D

DRN. K Banks	3-1-76	FIRST USED ON DZ11
CHK'D P. Cyganiewicz	5-19-76	digital
ENG. Robert Anderson	5-12-76	TITLE SYSTEM CONNECT DIAGRAM
PROJ. ENG. Lawrence Kenney	5-12-76	
PROD.		
NEXT HIGHER ASSY. D-UA-DZ11-Ø-Ø		SIZE D CODE BD NUMBER DZ11-Ø-8 REV. C
SCALE -/-/-		
SHEET OF		DIST.

MK

"THIS DRAWING AND SPECIFICATIONS, HEREIN, ARE THE PROPERTY OF DIGITAL EQUIPMENT CORPORATION AND SHALL NOT BE REPRODUCED OR COPIED OR USED IN WHOLE OR IN PART AS THE BASIS FOR THE MANUFACTURE OR SALE OF ITEMS WITHOUT WRITTEN PERMISSION.
COPYRIGHT © 1976, DIGITAL EQUIPMENT CORPORATION"

NOTES:

1. ~~DO NOT REMOVE SHIPPING BRACKET.~~
2. TEST CONNECTORS ITEMS 2 & 5 (NOT SHOWN) ARE USED FOR TESTING DZ11 A, B & E. ALSO NOT SHOWN IS A TEST CONNECTOR (ITEM 15) USED FOR TESTING THE DZ11-C, D & F.
3. AT SYSTEM CONFIGURATION LEVEL, ASSEMBLE ITEM #29 TO MODULE PRECEDING ITEM(S) 1 OR 14. ORIENTATE AS SHOWN. MAKE CERTAIN SURFACES THAT ITEM 29 ADHERE TO ARE FREE FROM GREASE OR OTHER FOREIGN MATTER.

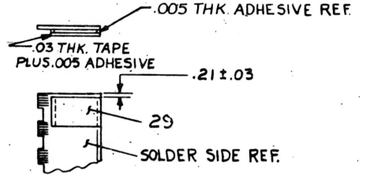

SECTION F-F
SEE NOTE 3

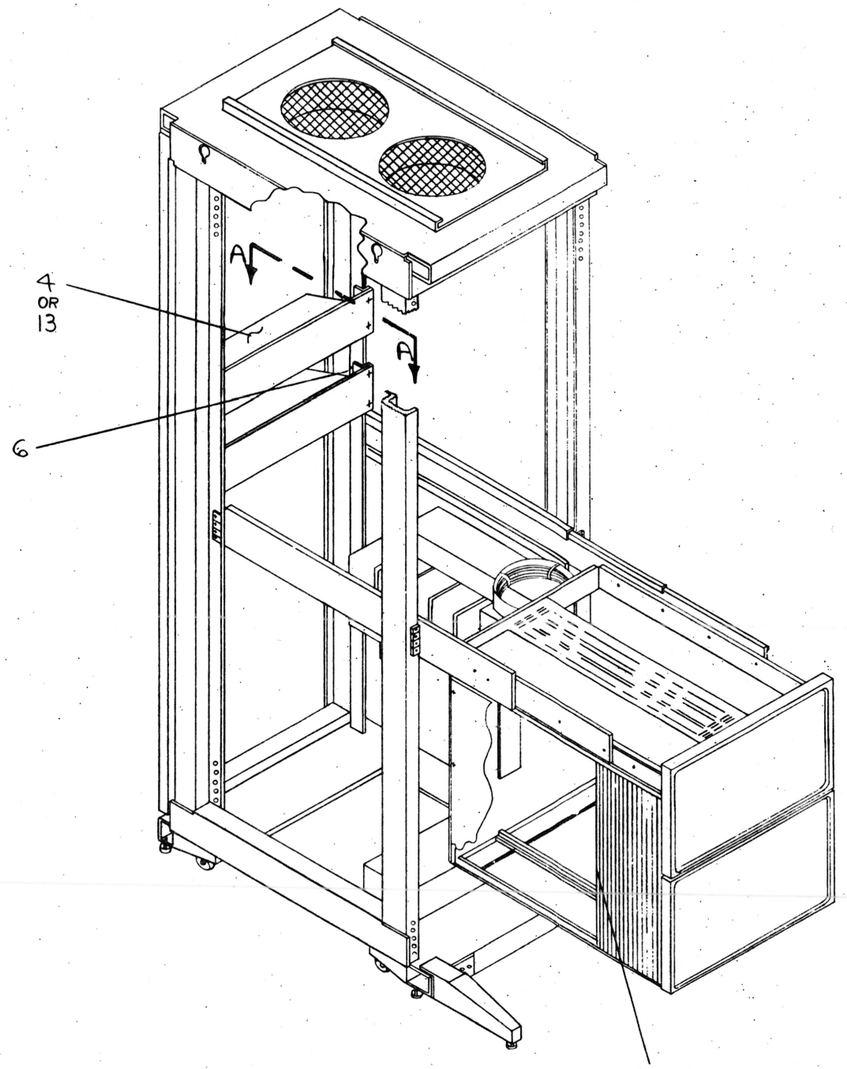

SEE VIEW E-E

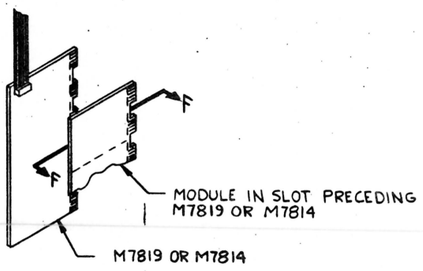

VIEW E-E

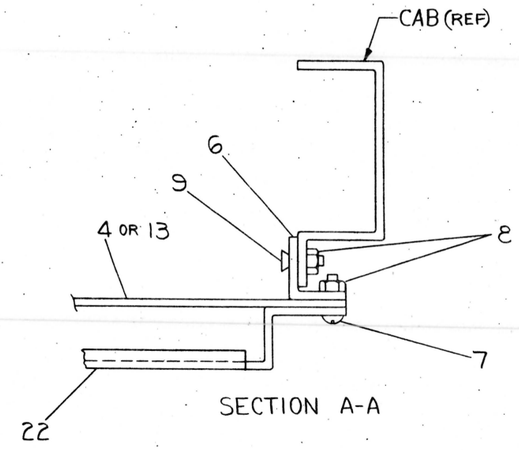

SECTION A-A

FOR PARTS LIST SEE A-PL-DZ11-0-0

REVISIONS			
CHK	CHANGE NO.	REV.	
MK	DZ11-00001	A	B. Chisson 4 Jan. 77 R.A. CORMIER
Kf	DZ11-00002	B	B. Chisson 9 May 77 R.A. CORMIER
	DZ11-00003	C	B. Chisson 22 August 77 R. CORMIER
EE	DZ11-00004	D	SIZE of Fixture 19 Feb 78 P. PORRECA
BY	DZ11-MK007	H	Paul Porreca 3 May 78 R. OLSON 16 JUNE 78

	DESCRIPTION	DWG./PART NO.	ITEM NO.
	UNLESS OTHERWISE SPECIFIED DIMENSIONS ARE IN INCHES		

ANGLES ±0° 30'	CLASS OF ACCURACY (CHECK ONE)	NOMINAL DIMENSION RANGE INCHES					
		OVER 0 TO 0.2	OVER 0.2 TO 1.2	OVER 1.2 TO 4.0	OVER 4.0 TO 12.0	OVER 12.0 TO 40.0	OVER 40.0 TO 80.0
SURFACE QUALITY IN MICROINCHES	MEDIUM ☐	±.004	±.008	±.012	±.016	±.024	±.04
	PREFERRED ☐	±.012	±.016	±.025	±.04	±.063	±0.1

QUANTITY & VARIATION

THIRD ANGLE PROJECTION

REMOVE BURRS AND BREAK SHARP CORNERS

DO NOT SCALE DWG

MATERIAL SEE PARTS LIST

FINISH

DRN. K. Sims	5-4-76	FIRST USED ON DZ11
CHK'D P. Coppedge	5-19-76	digital
ENG.		TITLE UNIT ASSY DZ11
PROJ. ENG.	5-24-76	
PROD.	5-24-76	
NEXT HIGHER ASSY.		
B-DD-DZ11-0		SIZE D | CODE UA | NUMBER DZ11-0-0 | REV. H
SCALE NONE		DIST.
SHEET 1 OF 4		

"THIS DRAWING AND SPECIFICATIONS, HEREIN, ARE THE PROPERTY OF DIGITAL EQUIPMENT CORPORATION AND SHALL NOT BE REPRODUCED OR COPIED OR USED IN WHOLE OR IN PART AS THE BASIS FOR THE MANUFACTURE OR SALE OF ITEMS WITHOUT WRITTEN PERMISSION.
COPYRIGHT ©1976, DIGITAL EQUIPMENT CORPORATION"

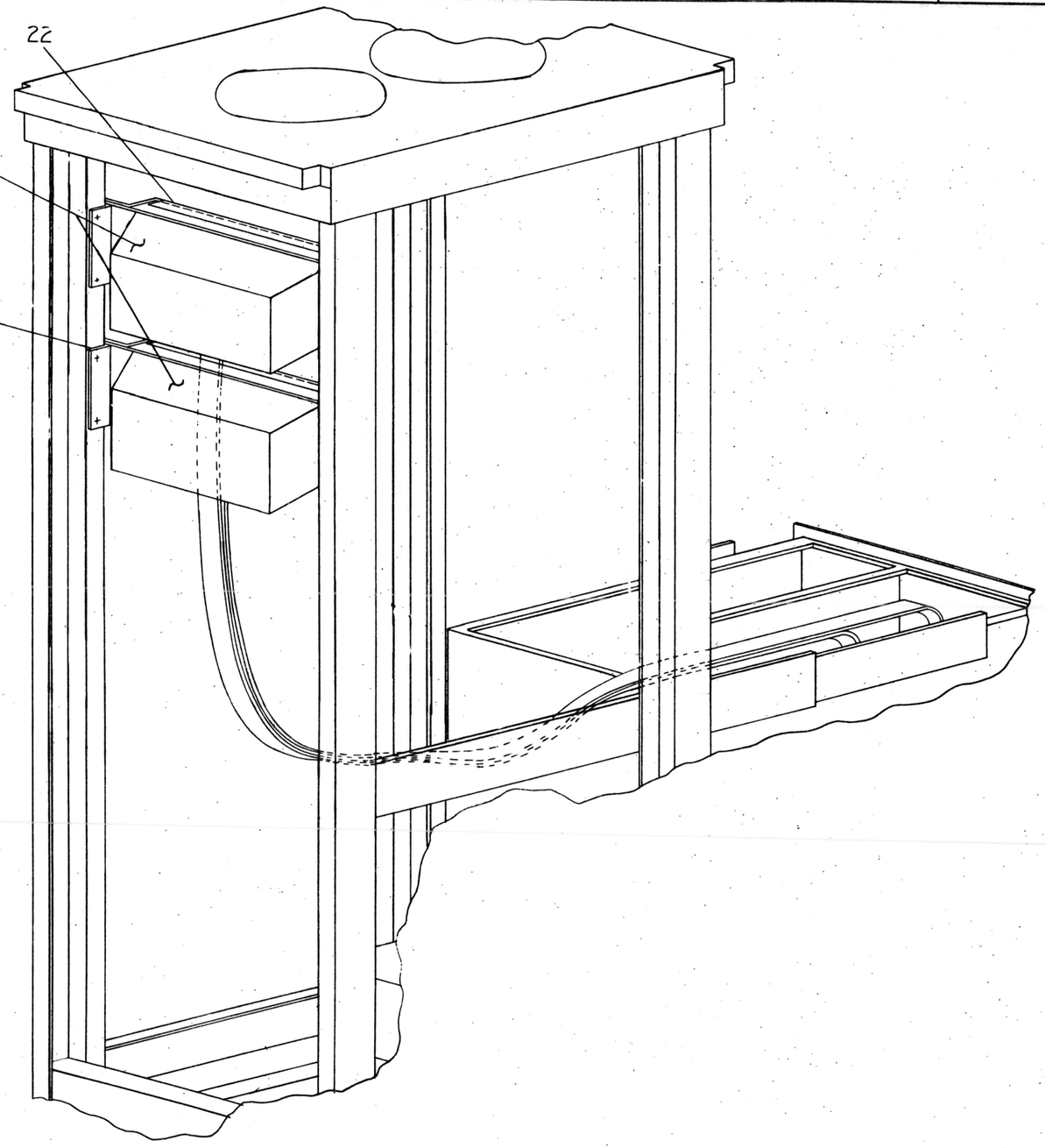

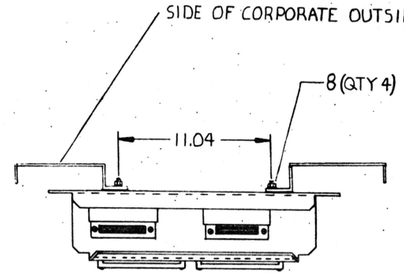

STANDARD DZ11-AA/EE MOUNTING
(SCALE NONE)

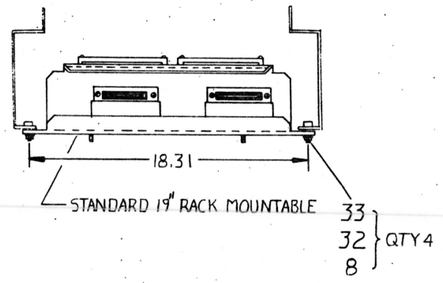

OPTIONAL DZ11-AA/EE MOUNTING
(SCALE NONE)

REVISIONS		
CHK	CHANGE NO.	REV.

TITLE	UNIT ASSY DZ11	SIZE CODE	NUMBER / REV.
SCALE NONE	SHEET 2 OF 4	D UA	DZ11-Ø-Ø H
		DIST.	MK 1

"THIS DRAWING AND SPECIFICATIONS, HEREIN, ARE THE PROPERTY OF DIGITAL EQUIPMENT CORPORATION AND SHALL NOT BE REPRODUCED OR COPIED OR USED IN WHOLE OR IN PART AS THE BASIS FOR THE MANUFACTURE OR SALE OF ITEMS WITHOUT WRITTEN PERMISSION.
COPYRIGHT © 1976, DIGITAL EQUIPMENT CORPORATION"

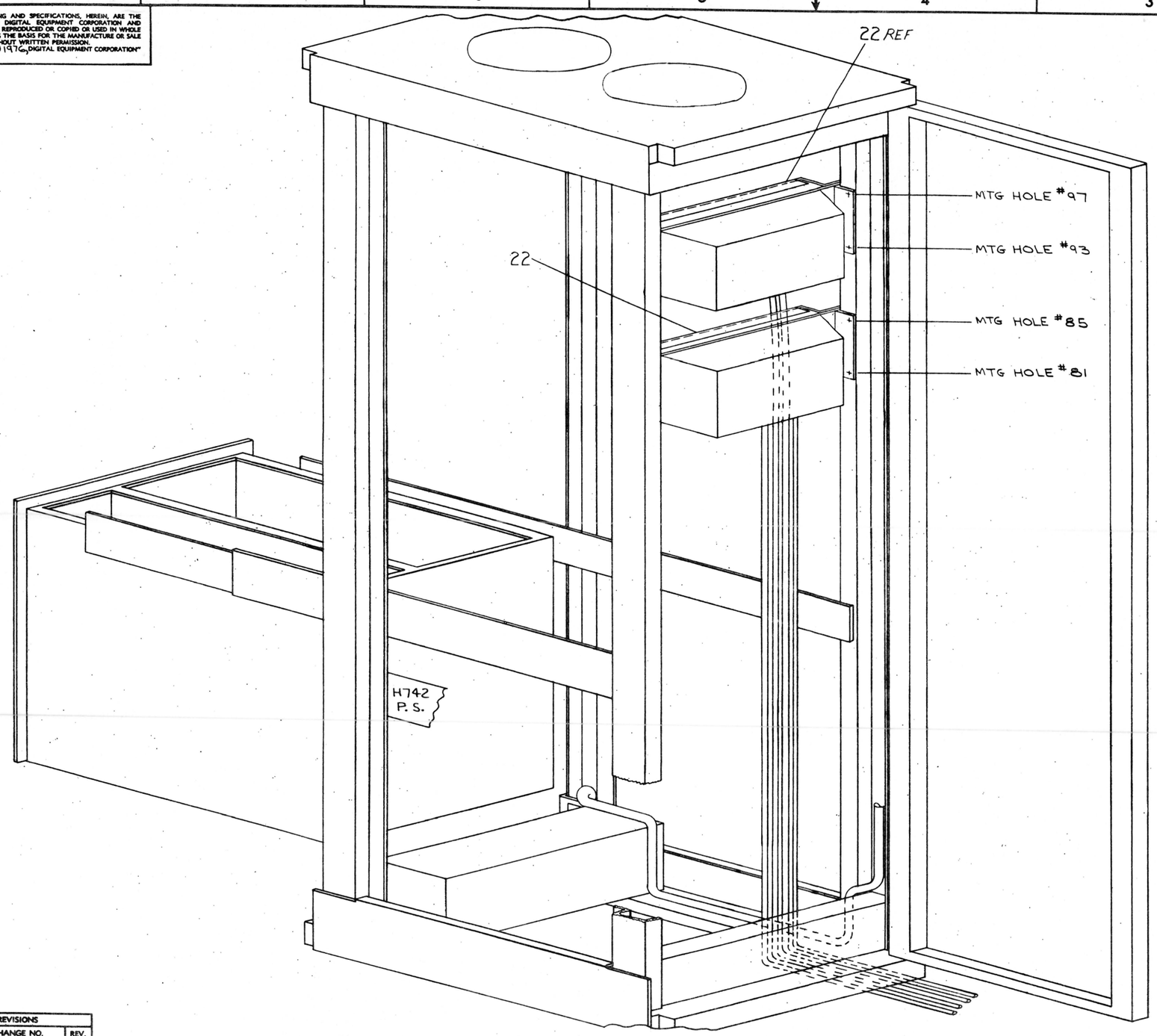

REVISIONS		
CHK	CHANGE NO.	REV.

TITLE	SIZE	CODE	NUMBER	REV.
UNIT ASSY DZ11	D	UA	DZ11-Ø-Ø	H
SCALE NONE SHEET 3 OF 4	DIST. MK			

DEC FORM NO. DRD 137

"THIS DRAWING AND SPECIFICATIONS, HEREIN, ARE THE PROPERTY OF DIGITAL EQUIPMENT CORPORATION AND SHALL NOT BE REPRODUCED OR COPIED OR USED IN WHOLE OR IN PART AS THE BASIS FOR THE MANUFACTURE OR SALE OF ITEMS WITHOUT WRITTEN PERMISSION.
COPYRIGHT © DIGITAL EQUIPMENT CORPORATION"

NOTE:
MOUNT FILTERS (ITEM 23 OR 24) TO THE OUTSIDE OF MOUNTING BRACKET (ITEM 22) WITH SCREWS AND LOCKWASHERS (ITEM 27 AND 28)

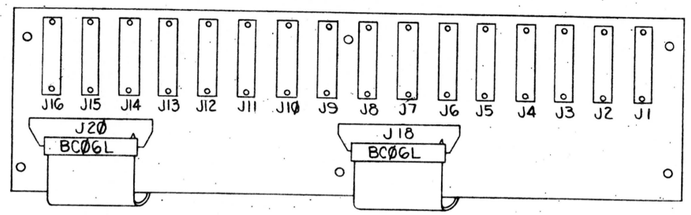

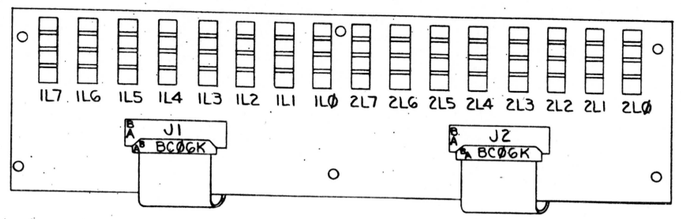

DETAIL A

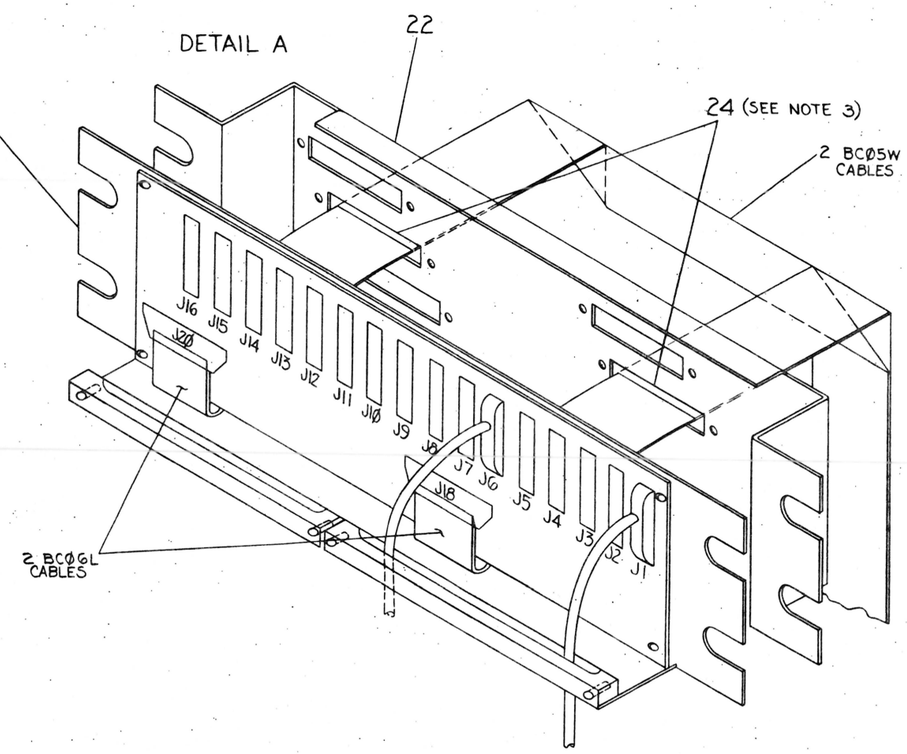

DETAIL B

DETAIL C

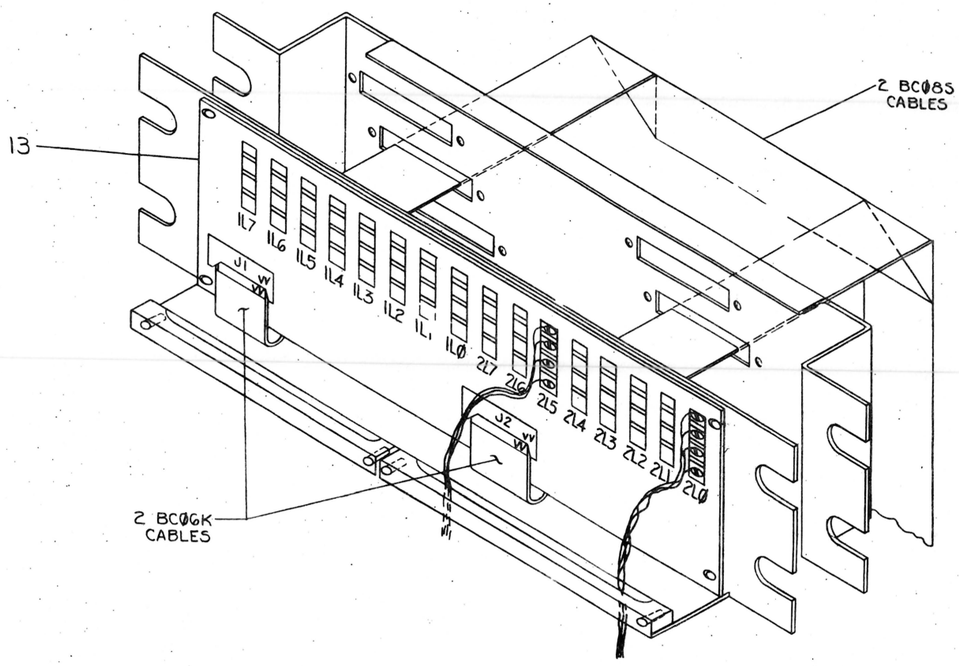

DETAIL D

REVISIONS		
CHK	CHANGE NO.	REV.

TITLE	UNIT ASSY. DZ11		
SCALE NONE	SHEET 4 OF 4	SIZE D	CODE UA
DIST.		NUMBER DZ11-0-0	REV. H

DEC FORM NO. DRD 127

DIGITAL EQUIPMENT CORPORATION
MAYNARD, MASSACHUSETTS
PARTS LIST

MADE BY K. DAVIS
DATE 5-4-76
CHECKED P. Cappabianca
DATE 14 May 76
SECTION
ENG Robert A. Cormier
DATE 5-13-76
PROD Tom McCabe
DATE 5-14-76
ISSUED SECT.

ITEM NO.	DWG NO. / PART NO.	DESCRIPTION	QUANTITY / VARIATION DZ11-A	DZ11-B	DZ11-E	DZ11-C	DZ11-D	DZ11-F	DZ11-AA	DZ11-BA	DZ11-EA
1	D-UA-M7819-Ø-Ø	8 LINE EIA ASYNCHRONOUS MUX	1	1	2	-	-	-	-	-	2
2	D-UA-H3271-0-0	CONNECTOR, TURN AROUND (E.I.A)	1	-	1	-	-	-	-	-	1
3	D-IA-BCØ5W-15	5Ø CONDUCTOR SIGNAL CABLE (BCØ5W)	1	1	2	-	-	-	-	-	-
4	D-UA-H317-E-Ø	H317 CABLE BOX ASSY (EIA)	1	-	1	-	-	-	-	-	-
5	D-CS-H325-Ø-1	H325 TEST CONNECTOR	1	-	1	-	-	-	1	-	1
6	C-MD-7414386-0-0	BRACKET, PANEL	2	-	2	2	-	2	-	-	-
7	9006071-03	SCR, PH, TRUSS, HD, 10-32 X .38	4	-	4	4	-	4	-	-	
8	9006565-00	NUT, KEP 10-32	8	-	8	8	-	8	4	-	4
9	9006073-02	SCR, PH, FL, HD, 10-32 X .50	4	-	4	4	-	4	-	-	-
~~10~~	~~9007786-00~~	~~NUT, SPEED 10-32~~	~~4~~	~~-~~	~~4~~	~~4~~	~~-~~	~~4~~			
11	D-BD-DZ11-Ø-8	SYSTEM CONNECT DIAGRAM	REF	REF	REF	REF	REF	REF	REF	REF	REF
12	C-IA-BCO8S-15	40 CONDUCTOR SIGNAL CABLE (BCO8S)	-	-	-	1	1	2	-	-	-
13	D-UA-H317-F-Ø	H317 CABLE BOX ASSY (20 MA)	-	-	-	1	-	1	-	-	-
14	D-UA-M7814-Ø-Ø	8 LINE 20 MA ASYNCHRONOUS MUX	-	-	-	1	1	2	-	-	-
15	D-UA-H319Ø-0-0	CONNECTOR, TURN AROUND (2Ø MA)	-	-	-	1	1	2	-	-	-
16	A-SP-3700285-0-0	PKG. INST. CUSTOMER (A VERSION)	1	-	-	-	-	-	1	-	-
17	A-SP-3700285-1-0	PKG. INST. CUSTOMER (C VERSION)	-	-	-	1	-	-	-	-	-
18	A-SP-3700285-2-0	PKG. INST. CUSTOMER (B VERSION)	-	1	-	-	-	-	-	1	-
19	A-SP-3700285-3-0	PKG. INST. CUSTOMER (D VERSION)	-	-	-	-	1	-	-	-	-
20	A-SP-3700285-4-0	PKG. INST. CUSTOMER (E VERSION)	-	-	1	-	-	-	-	-	1
21	A-SP-3700285-5-0	PKG. INST. CUSTOMER (F VERSION)	-	-	-	-	-	1	-	-	-
22	D-IA-7415808-0-0	CONNECTOR, MTG. PANEL	1	-	1	1	-	1	-	-	-

TITLE: PARTS LIST DZ11
ASSY NO.: D-UA-DZ11-Ø-Ø
SHEET 1 OF 2
SIZE: A | CODE: PL | NUMBER: DZ11-Ø-Ø | REV.: H | ECO NO.: DZ11-MKØØ7
DIST.

DEC FORM DEC 16-(325)-1031-N870
DRA 110

DIGITAL EQUIPMENT CORPORATION
MAYNARD, MASSACHUSETTS
PARTS LIST

MADE BY K.DAVIS
DATE 4-MAY-76
CHECKED P. CAPPABIANCA
DATE 14-MAY-76
SECTION 1
ENG R. CORMIER
DATE 13-MAY-76
PROD T. McCABE
DATE 14-MAY-76
ISSUED SECT. 1

ITEM NO.	DWG NO. / PART NO.	DESCRIPTION	QUANTITY / VARIATION DZ11-A	DZ11-B	DZ11-E	DZ11-C	DZ11-D	DZ11-F	DZ11-AA	DZ11-BA	DZ11-EA
23	1214614-01	FILTERED CONNECTOR (40 POS)	-	-	-	1	1	2	-	-	-
24	1214614-02	FILTERED CONNECTOR (50 POS)	1	1	2	-	-	-	-	-	-
25	D-UA-BCØ6K-ØJ-Ø	MIRROR IMAGE CABLE (40 POS)	-	-	-	1	1	2	-	-	-
26	D-UA-BCØ6L-ØJ-Ø	MIRROR IMAGE CABLE (50 POS)	1	1	2	-	-	-	-	-	-
27	9006022-01	SCR, PHL PAN HD #6-32 x .38	2	2	4	2	2	4	-	-	-
28	9006633-00	WASHER, INT TOOTH LOCK #6	2	2	4	2	2	4	-	-	-
29	1215278-00	CABLE PROTECTOR	1	1	2	1	1	2	-	-	-
30	D-IA-BCØ5W - 8	50 CONDUCTOR SIGNAL CABLE (BCØ5W)	-	-	-	-	-	-	1	1	2
31	E-AD-7016469-0-0	EIA PANEL WITH FILTER ASS'Y	-	-	-	-	-	-	1	-	1
32	9006074-03	SCR, PH, TRUSS, HD, 10-32 X 5/8 LG	-	-	-	-	-	-	4	-	4
33	9007651-00	WASHER, EXT. TOOTH, LOCK #10	-	-	-	-	-	-	4	-	4

TITLE: PARTS LIST DZ11
ASSY NO.: D-UA-DZ11-Ø-Ø
SHEET 2 OF 2
SIZE: A | CODE: PL | NUMBER: DZ11-Ø-Ø | REV.: H | ECO NO.: DZ11-MKØØ7
DIST.

DEC FO[illegible]-(325)-1031-N870
DRA 11[illegible]

"THE MATERIAL HEREIN IS FOR INFORMATION PURPOSES ONLY AND IS SUBJECT TO CHANGE WITHOUT NOTICE. DIGITAL EQUIPMENT CORPORATION ASSUMES NO RESPONSIBILITY FOR ANY ERRORS WHICH MAY APPEAR HEREIN."

DRAWING DIRECTORY

"THIS DRAWING AND SPECIFICATIONS, HEREIN, ARE THE PROPERTY OF DIGITAL EQUIPMENT CORPORATION AND SHALL NOT BE REPRODUCED OR COPIED OR USED IN WHOLE OR IN PART AS THE BASIS FOR THE MANUFACTURE OR SALE OF ITEMS WITHOUT WRITTEN PERMISSION. COPYRIGHT © 1976, DIGITAL EQUIPMENT CORPORATION."

FOR FIELD MAINTENANCE PRINT SET SEE:

B-TC-DZ11-Ø-6 DZ11-A,B&E(EIA)
B-TC-DZ11-Ø-11 DZ11-C,D&F(2ØMA)

UNIT VARIATIONS

VAR	TITLE
DZ11-A	8 LINE DBL BUF ASYNC EIA MUX
DZ11-B	DZ11-A MINUS DISTRIBUTION PANEL
DZ11-E	16 LINE ASYNC MUX EIA
	(DZ11-A + DZ11-B)
DZ11-C	8 LINE DBL BUF ASYNC 20MA MUX
DZ11-D	DZ11-C MINUS DISTRIBUTION PANEL
DZ11-F	16 LINE ASYN MUX-20MA (DZ11-C & DZ11-D)
DZ11-AA	8 LINE DBL BUF ASYNC EIA MUX W. 8FT. CABLE
DZ11-BA	DZ11-AA MINUS DIST. PANEL
DZ11-EA	DZ11-AA + DZ11-BA

REVISIONS	CHANGE NO.	REV.
KT	DZ11-1	A
KT	DZ11-2	B
KT	DZ11-3	C
RS	DZ11-4	D
RS	DZ11-MKØØ5	E
GH	DZ11-MK6	F
GH	DZ11-MK7	H

USED ON OPTION/MODEL	
DZ11	
SHEET 1 OF 3	

DRN. K. DAVIS	DATE 5-6-76	TITLE ASYNCHRONOUS MUX DZ11
CHK'D. R. Giordano	DATE 5-19-76	
PROJ. ENG.	DATE	
PROD.	DATE	

SIZE	CODE	NUMBER	REV
B	DD	DZ11-Ø	H
DIST.			

digital

DRB 106A

MK

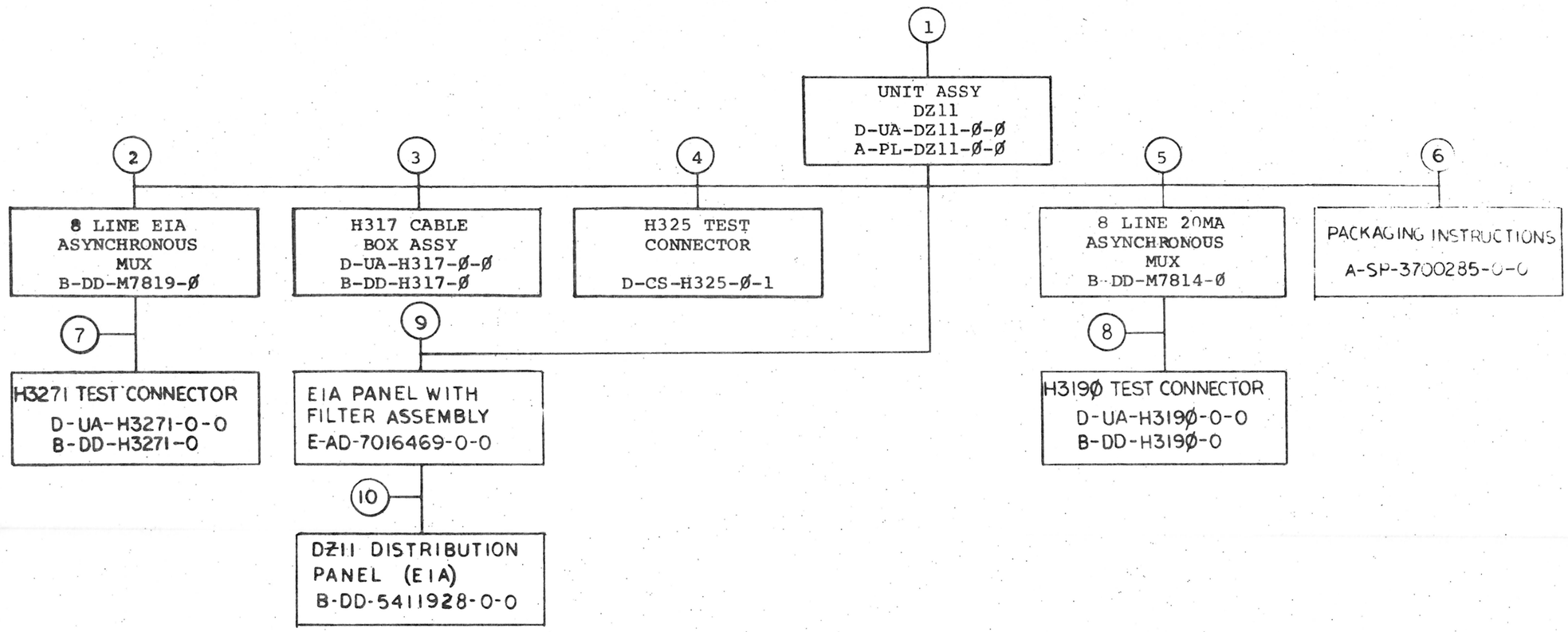

TITLE	ASYNCHRONOUS MUX DZ11	SHEET 2 OF 3	SIZE	CODE	NUMBER	REV
			B	DD	DZ11-Ø	H

DRB 107
DEC 16—(325)—1062—3—N871

MK

FIND NO.	DRAWING NO.	DESCRIPTION	TYPE
1	MPØØ132	DZ11-A,B,&E FIELD MAINTENANCE PRINT SET	-
	B-TC-DZ11-Ø-6	DZ11-A,B,&E FIELD MAINTENANCE PRINT SET (TC)	-
	D-UA-DZ11-Ø-Ø	UNIT ASSY DZ11	E/M
	A-PL-DZ11-Ø-Ø	ASYNCHRONOUS MUX DZ11	E/M
	C-IA-H327-Ø-Ø	CONNECTOR, TURN AROUND	E/M
	D-IA-BCØ5W-Ø-Ø	50 CONDUCTOR SIGNAL CABLE (BCØ5W)	E/M
	C-MD-7414386-Ø-Ø	BRACKET, PANEL	M
	C-IA-BCØ8S-Ø-Ø	40 CONDUCTOR SIGNAL CABLE (BCØ8S)	E/M
	D-UA-BCØ6K-Ø-Ø	MIRROR IMAGE CABLE (40 POS)	E/M
	A-PL-DZ11-Ø-5	SHIPPING LIST	M
	D-BD-DZ11-Ø-8	SYSTEM CONNECT DIAGRAM	E
	D-UA-BCØ6L-Ø-Ø	MIRROR IMAGE CABLE (50 POS)	E/M
	MP00253	DZ11-C,D&F FIELD MAINTENANCE PRINT SET	-
	B-TC-DZ11-Ø-11	DZ11-C,D&F FIELD MAINTENANCE PRINT SET	-
	A-PS-1214614-0-0	H7ØØ4 FILTER CONNECTOR	E/M
	A-SP-DZ11-Ø-1	DZ11 TEST PROCEDURE	E/M
	A-SP-DZ11-Ø-2	DZ11 ACCEPTANCE PROCEDURE	-
	A-SP-DZ11-Ø-9	DZ11 ENGINEERING SPECIFICATION	-
	D-IA-7415808-0-0	CONNECTOR MTG PANEL	M
	A-PS-1215278-00	CABLE PROTECTOR	M
2	B-DD-M7819-Ø	8 LINE EIA ASYNCHRONOUS MUX	E/M
3	D-UA-H317-Ø-Ø	H317 CABLE BOX ASSY	E/M
	B-DD-H317-Ø	H317 CABLE BOX ASSY	E
4	D-CS-H325-Ø-1	H325 TEST CONNECTOR	E/M
	K-CO-H325-Ø-4	X-Y COORDINATE HOLE LOCATION	M
	D-AH-H325-Ø-5	ASSY/DRILLING HOLE LAYOUT	M
	B-MH-H325-Ø-6	MODULE ECO HISTORY	E/M
5	B-DD-M7814-Ø	8 LINE 20 MA ASYNCHRONOUS MUX	E/M
6	A-SP-3700285-0-0	PACKAGING INSTRUCTION	M
7	D-UA-H3271-Ø-Ø	CONNECTOR, TURN AROUND (EIA)	M
	B-DD-H3271-Ø	CONNECTOR, TURN AROUND (EIA)	E/M
8	D-UA-H319Ø-Ø-Ø	CONNECTOR, TURN AROUND (20 MA)	M
	B-DD-H319Ø-Ø	CONNECTOR, TURN AROUND (20 MA)	E/M
9	E-AD-7016469-0-0	EIA PANEL WITH FILTERS ASSY.	E/M
	E-IA-7421965-0-0	PANEL, MOUNTING	M
	D-UA-BC06L-0-0	MIRROR IMAGE CABLE (50 POS.)	E/M
10	B-DD-5411928-0	DZ11 DISTRIBUTION PANEL (EIA)	E/M
	D-UA-5411928-0-0	DZ11 DISTRIBUTION PANEL (EIA)	E/M
	B-PL-5411928-0-0	DZ11 DISTRIBUTION PANEL (EIA)	E/M

TYPE: E ELECTRICAL
M MECHANICAL
E/M ELECTRO/MECHANICAL

digital

TITLE	SHEET	SIZE	CODE	NUMBER	REV
ASYNCHRONOUS MUX DZ11	3 OF 3	B	DD	DZ11-0	H

DRB 108A

MK

THIS DRAWING AND SPECIFICATIONS, HEREIN, ARE THE PROPERTY OF DIGITAL EQUIPMENT CORPORATION AND SHALL NOT BE REPRODUCED OR COPIED OR USED IN WHOLE OR IN PART AS THE BASIS FOR THE MANUFACTURE OR SALE OF ITEMS WITHOUT WRITTEN PERMISSION.
COPYRIGHT © 1979 DIGITAL EQUIPMENT CORPORATION

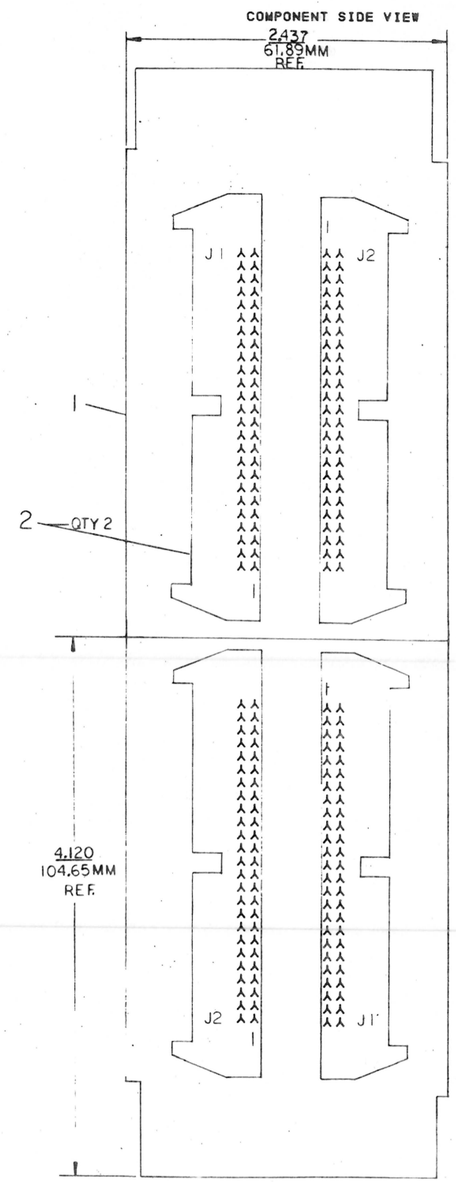

NOTES:

CHK	CHANGE NO	REV
	REDRAWN	C
	H3271-MKIA	C
	R HARRINGTON	

ETCH REV. D
P.C. DESIGN DATA BASE REV. D

SIGNATURES	DATE
DRN.	11-21-79
CHK'D.	15 MAR 79
ENG.	
PROJ.ENG.	
PROD.	
SCALE 2-1	
SHT. 1 OF 3	
NEXT HIGHER ASSY. B-DD-H3271-0	

digital

TITLE
TEST CONNECTOR

SIZE	CODE	NUMBER	REV
D	UA	H3271-0-0	C

MK 1 MS#301153

THIS DRAWING AND SPECIFICATIONS, HEREIN, ARE THE PROPERTY OF DIGITAL EQUIPMENT CORPORATION AND SHALL NOT BE REPRODUCED OR COPIED OR USED IN WHOLE OR IN PART AS THE BASIS FOR THE MANUFACTURE OR SALE OF ITEMS WITHOUT WRITTEN PERMISSION.
COPYRIGHT © 1979 DIGITAL EQUIPMENT CORPORATION

REVISIONS		
CHK	CHANGE NO	REV

TITLE	SIZE	CODE	NUMBER	REV.
TEST CONNECTOR	D	UA	H3271-0-0	C
SCALE 2/1	SHEET 2 OF 3	DIST.		

MK

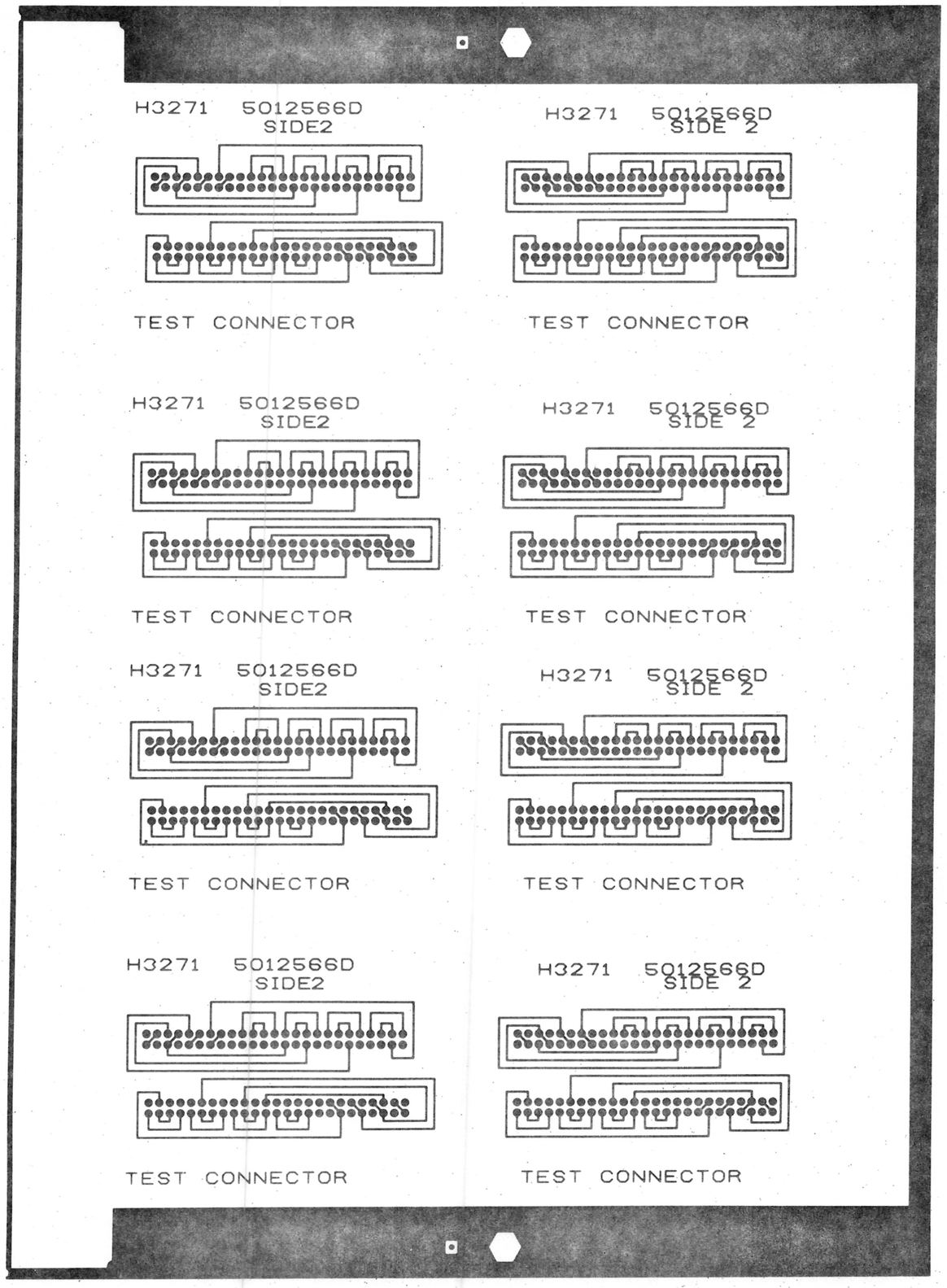

TITLE TEST CONNECTOR
SCALE 2/1
SHEET 3 OF 3
SIZE D CODE UA NUMBER H3271-0-0 REV. C
DIST
MK

D UA H3271-0-0 C

"THIS DRAWING AND SPECIFICATIONS, HEREIN, ARE THE PROPERTY OF DIGITAL EQUIPMENT CORPORATION AND SHALL NOT BE REPRODUCED OR COPIED OR USED IN WHOLE OR IN PART AS THE BASIS FOR THE MANUFACTURE OR SALE OF ITEMS WITHOUT WRITTEN PERMISSION.
COPYRIGHT © 1976, DIGITAL EQUIPMENT CORPORATION"

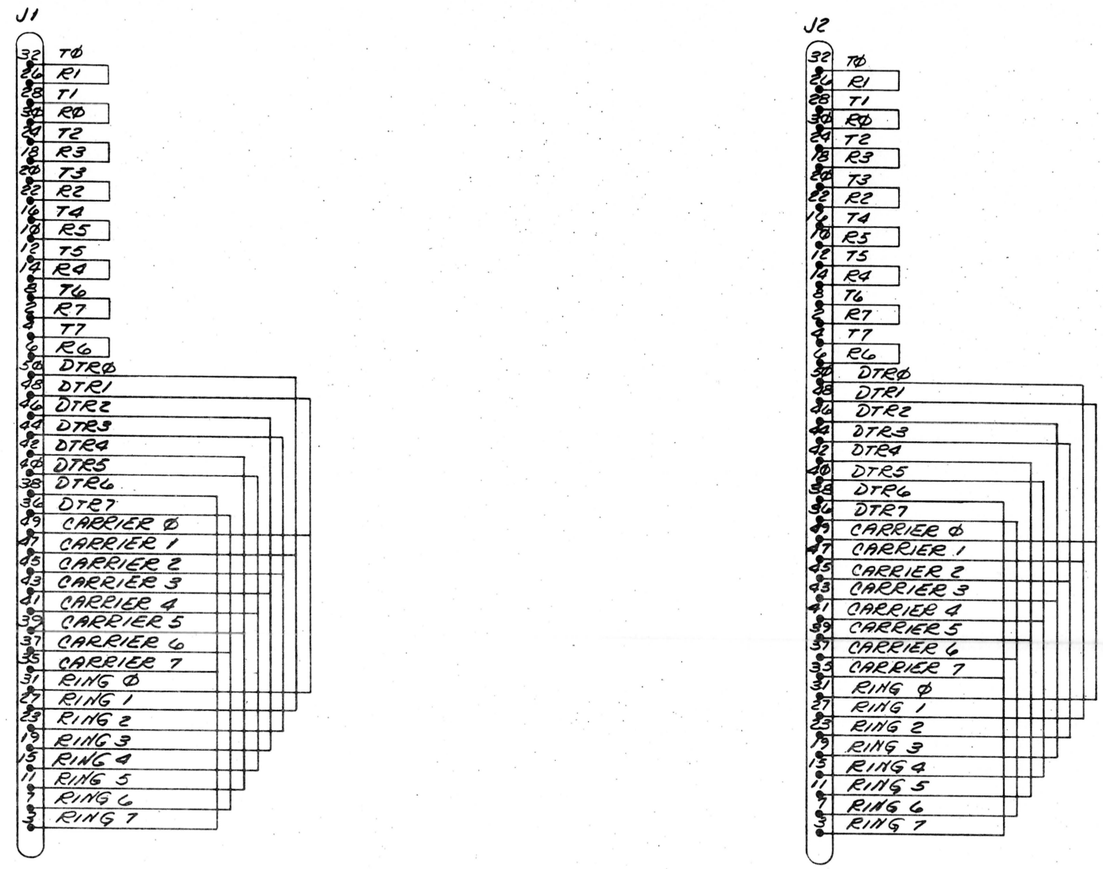

REVISIONS		
CHK	CHANGE NO.	REV.
	H3271-MK001	C
	R. HARRINGTON	

DRN		12/24/76
CHK		3/29/77
ENG.		8 Apr 77
PROJ. ENG.		
PROD.		27 Mar 77
NEXT HIGHER ASSY.		
D-UA-H3271-Ø-Ø		
SCALE		
SHEET 1 OF 1		

FIRST USED ON: DZ11

digital

TITLE: TEST CONNECTOR

SIZE	CODE	NUMBER	REV.
D	CS	H3271-Ø-1	C

DIST.

SIZE D CODE CS NUMBER H3271-Ø-1 REV. C

"THIS DRAWING AND SPECIFICATIONS, HEREIN, ARE THE PROPERTY OF DIGITAL EQUIPMENT CORPORATION AND SHALL NOT BE REPRODUCED OR COPIED OR USED IN WHOLE OR IN PART AS THE BASIS FOR THE MANUFACTURE OR SALE OF ITEMS WITHOUT WRITTEN PERMISSION. COPYRIGHT © 1978 DIGITAL EQUIPMENT CORPORATION"

NOTES:

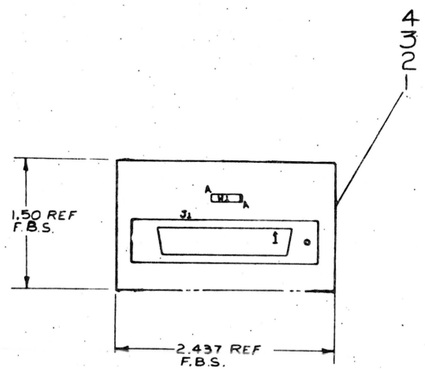

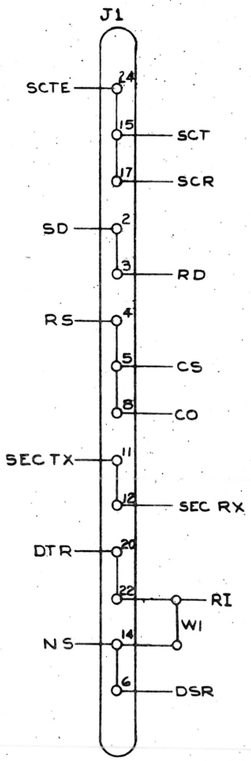

QTY	REF. DESIGNATION	DESCRIPTION	PART NO.	ITEM NO.
REF		X-Y COORDINATE HOLE LOC	K-CO-H325-0-4	1
REF		ASSY/DRILLING HOLE LAYOUT	D-AH-H325-0-5	2
REF		MODULE ECO HISTORY	B-MH-H325-0-6	3
1		ETCHED CIRCUIT BOARD	5011698	4
1	J1	CONNECTOR	1210247	5
1	W	INSULATED JUMPER WIRE	9009185	6

PARTS LIST

FIRST USED ON OPTION MODEL: DVII

ETCH BOARD REV. C

IC TYPE	GND	+5V
GND AND 5V ARE USUALLY PIN 7 AND 14 RESPECTIVELY EXCEPTIONS ARE STATED ABOVE		

IC PIN LOCATIONS

REV.	CHANGE NO.	REVISIONS
A	ORIGINATED	
B	H325-00001	

DEC NO.	EIA NO.	DEC NO.	EIA NO.

SEMICONDUCTOR CONVERSION CHART

DRN. [signature] DATE 4/23/75
CHKD. [signature] DATE 4/23/75
ENG. [signature] DATE 4/24/75
PROJ. ENG. [signature] DATE 4/24/75
PROD. R. Wall DATE 4-24-75
NEXT HIGHER ASSY D-UA-DVII-0-0
SCALE
SHEET 1 OF 1

digital

TITLE H325 TEST CONNECTOR

SIZE D CODE CS NUMBER H325-0-1 REV. B

DIST.

MK

"THIS DRAWING AND SPECIFICATIONS, HEREIN, ARE THE PROPERTY OF DIGITAL EQUIPMENT CORPORATION AND SHALL NOT BE REPRODUCED OR COPIED OR USED IN WHOLE OR IN PART AS THE BASIS FOR THE MANUFACTURE OR SALE OF ITEMS WITHOUT WRITTEN PERMISSION.
COPYRIGHT © 1975 DIGITAL EQUIPMENT CORPORATION"

WIRE TABLE

ITEM NO.	DESCRIPTION AWG	COLOR	FROM CONNECTION	WITH	TO CONNECTION	WITH	REMARKS
3	22	BLK	P1-7 NOTE #4	4	P2-7 NOTE #4	4	
3		RED	P1-2	8	P2-3	8	
3		SHIELD	P1-1 NOTE #2 & 4	4 & 7	P2-1 NOTE #2	4 & 7	
3		BLK	P1-7 NOTE #4	4	P2-7 NOTE #4	4	
3		WHT	P1-3	8	P2-2	8	
3		SHIELD	P1-1 NOTE #2 & 4	4 & 7	P2-1 NOTE #2	4 & 7	
3		BLK	P1-6	8	P2-20	8	
3		GRN	P1-20	8	P2-6	8	
3	22	SHIELD	SEE NOTE #3	–	SEE NOTE #3	–	

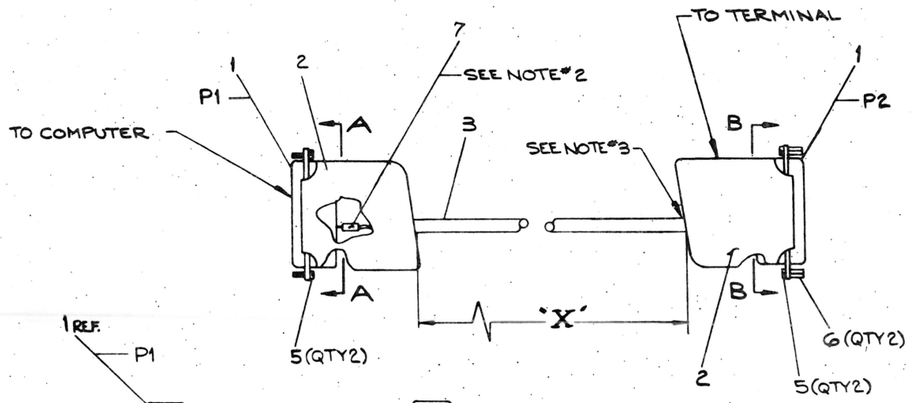

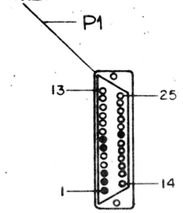

SECTION A-A
SCALE: NONE
(REAR VIEW)

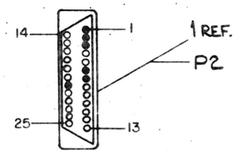

SECTION B-B
SCALE: NONE
(REAR VIEW)

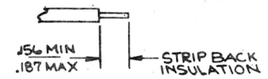

DETAIL-A
TYP. ALL WIRE ENDS

LEGEND

NUMBER	VARIATION DIM "X"	REMARKS
BCØ3M-Ø1	1FT.	PREASSEMBLED
BCØ3M-25	25FT.	PREASSEMBLED
BCØ3M-AØ	100FT.	PREASSEMBLED
BCØ3M-B5	250FT.	PARTIALLY ASSEMBLED
BCØ3M-EØ	500FT.	PARTIALLY ASSEMBLED
BCØ3M-LØ	1000FT.	PARTIALLY ASSEMBLED
BCO3M-H5	750FT.	PARTIALLY ASSEMBLED

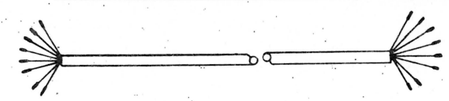

STEP #1
INSTALL ITEM #4, 7 AND 8 TO ITEM #3 (CABLE) PER WIRE TABLE

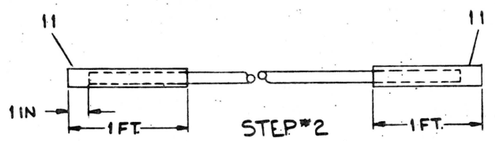

STEP #2
COVER BOTH ENDS WITH ITEM #11 (TUBING, HEAT SHRINK) PER ABOVE DIM'S

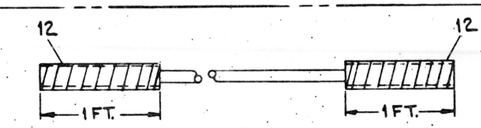

STEP #3
COVER BOTH ENDS WITH ITEM #12 (TAPE) PER ABOVE DIM'S

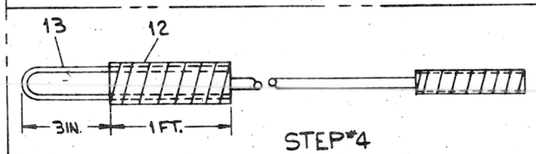

STEP #4
INSTALL ITEM #13 TO ITEM #3 BY USING ITEM #12 (TAPE). PER ABOVE DIM'S
THE WIRE LOOP AT END OF CABLE IS USED TO PULL CABLE THREW CONDUIT PIPE, AT INSTALLATION.

NOTES:

1. VARIATIONS AND LENGTHS SHOWN IN LEGEND ARE STANDARD AND ARE SPECIFIED BY NUMERIC DESIGNATION IN FOOT INCREMENTS, THE TOLERANCE ON DIMENSION "X" WILL BE ± 2% OF THE FOOT INCREMENT.
2. DRAIN WIRES TO BE ENCLOSED WITH ITEM #7 (TUBING) FROM END OF CABLE JACKET TO POINT WERE THEY ENTER CONTACT.
3. CUT BACK DRAIN WIRE TO OUTER INSULATION ON BOTH ENDS.
4. THERE ARE TWO WIRES INSTALLED IN EACH #18-20 GA CONTACT (ITEM #4)
5. USE INSERTION/EXTRACTION TOOL (ITEM #9) TO CONSTRUCT CABLE. THIS PIECE IS DISCARDED AFTER USE.
6. 1 FOOT, 25 FOOT AND 100 FOOT CABLES ARE PREASSEMBLED. ALL OTHERS ARE PARTIALLY ASSEMBLED.
7. STEPS 1 THRU 4 ARE FOR CABLE LENGTHS OVER 100 FT.

REFERENCE INFORMATION

USE CRIMP TOOL TYPE M22520/1-01 WITH TH185 LOCATOR

CABLES OVER 100 FT ARE TO BE STOCKED IN KIT FORM AS FOLLOWS PUT ITEMS 1, 2, 5, 6, 9 AND 1 (ONE) COPY OF THIS PRINT INTO PLASTIC BAG (ITEM #10) FOLD OVER CABLE (ITEM #3) AND STAPLE TOGETHER.

8. REMOVE ITEM 6 FOR CONNECTION TO UNITS WITHOUT CABLES I.E. VTØ5, VT1ØØ, ETC.

							DESCRIPTION	DWG./PART NO.	ITEM NO.
A/R	A/R	A/R	A/R	–	–	–	WIRE #14 AWG (2 FT 6 IN LG)	9107370-00	13
A/R	A/R	A/R	A/R	–	–	–	TAPE (ROLL)	9009507	12
A/R	A/R	A/R	A/R	–	–	–	TUBING (HEAT SHRINK)	9107252-00	11
1	1	1	1	–	–	–	BAG, PLASTIC	9905129-21	10
1	1	1	1	–	–	–	TOOL, INSERT/EXTRACT	4700024	9
8	8	8	8	8	8	8	SOCKET #22	1212583-0	8
A/R	A/R	A/R	A/R	A/R	A/R	A/R	TUBING #18 GA (NAT)	9107278-11	7
2	2	2	2	2	2	2	SPACER #4-40 X .25 LG.	9008496	6
4	4	4	4	4	4	4	SCR. RETAINER (MALE)	9009722	5
4	4	4	4	4	4	4	SOCKET #18-20	1212583-1	4
A/R	A/R	A/R	A/R	A/R	A/R	A/R	CABLE	9107723	3
2	2	2	2	2	2	2	HOOD	1210493-50	2
2	2	2	2	2	2	2	PLUG	1211354	1
BCØ3M-H5	BCØ3M-LØ	BCØ3M-EØ	BCØ3M-B5	BCØ3M-AØ	BCØ3M-25	BCØ3M-Ø1	QUANTITY & VARIATION		

UNLESS OTHERWISE SPECIFIED DIMENSIONS ARE IN INCHES

ANGLES ±0° 30'	CLASS OF ACCURACY (CHECK ONE)	NOMINAL DIMENSION RANGE INCHES: OVER 0 TO 0.2	OVER 0.2 TO 1.2	OVER 1.2 TO 4.0	OVER 4.0 TO 12.0	OVER 12.0 TO 40.0	OVER 40.0 TO 80.0
SURFACE QUALITY IN MICROINCHES	MEDIUM ☐	±.004	±.008	±.012	±.016	±.024	±.04
	PREFERRED ☐	±.012	±.016	±.025	±.04	±.063	±0.1

THIRD ANGLE PROJECTION

REMOVE BURRS AND BREAK SHARP CORNERS

DO NOT SCALE DWG

MATERIAL SEE PARTS LIST

FINISH

DRN. 10-13-75
CHK. 10-14-75
ENG. 10/17/75
PROJ. 10-1-75
PROG. 10-13-75
NEXT HIGHER ASSY.

FIRST USED ON

digital

TITLE
CORD, EXTENSION
NULL MODEM

SIZE D | CODE JA | NUMBER BCØ3M-Ø-Ø | REV. D

SCALE 1/1
SHEET 1 OF 1
DIST.

REVISIONS	CHANGE NO.	REV.
CHK.	BCØ3M-00001	A
B. SAMPSON	BCØ3M-00002	B
B. SAMPSON	BCØ3M-00003	C
B. SAMPSON		D

DEC FORM NO. DRD 100-C

MP-BCO3M-00

"THIS DRAWING AND SPECIFICATIONS, HEREIN, ARE THE PROPERTY OF DIGITAL EQUIPMENT CORPORATION AND SHALL NOT BE REPRODUCED OR COPIED OR USED IN WHOLE OR IN PART AS THE BASIS FOR THE MANUFACTURE OR SALE OF ITEMS WITHOUT WRITTEN PERMISSION.
COPYRIGHT © 1975, DIGITAL EQUIPMENT CORPORATION"

WIRE TABLE

ITEM NO	DESCRIPTION AWG	COLOR	FROM CONNECTION	WITH	TO CONNECTION	WITH
1	#22	BLK	P1-1	#4	P2-1	#4
1	#22	RED	P1-2	#4	P2-3	#4
1	#22	GRN	P1-3	#4	P2-2	#4
5	#26	GRN	P1-4	#4	P1-5	#4
1	#22	BLU			P2-8	#4
1	#22	YEL	P1-7	#4	P2-7	#4
1	#22	VIO	P1-8	#4	P2-9	#4
5	#26	GRN	P2-5	#4		
1	#22	GRY	P1-20	#4	P2-6	#4
5	#26	GRN	P2-22	#4		
1	#22	ORN	P1-6	#4	P2-20	#4
5	#26	GRN			P1-22	#4
* 1	#22	BRN	P1-15	#4	P2-17	#4
* 5	#26	GRN			P1-24	#4
* 1	#22	WHT	P1-17	#4	P2-15	#4
* 5	#26	GRN	P2-24	#4		

* SEE NOTE #1

LEGEND

NUMBER	VARIATION DIM "X"	DIM "Y" REF
BCØ3P-2	2 FT ± 1IN.	2FT 1IN ± 1 IN
BCØ3P-25	25FT ± 3 IN	25FT 1IN ± 3IN
BCØ3P-50	50FT ± 10 IN	50FT 1IN ± 10 IN
BCØ3P-A0	100FT ± 20 IN	100FT 1IN ± 20IN

NOTES:

1. DO NOT USE CONS BCØ3P CABLES BETWEEN SYNCHRONOUS DEVICES BECAUSE THE UNSHIELDED TIMING LEADS (PIN 15 AND 17) CAN CAUSE CROSSTALK. THE BCØ3P-2 IS BEST FOR THIS TYPE OF APPLICATION.
2. CABLE (ITEM #1) TO GO INSIDE HOOD (ITEM #3) AT LEAST .50 AND WIRES SHOULD BE APPROXIMATELY 1.38 IN. IN LENGTH, SO THEY DON'T BUNCH INSIDE HOOD.

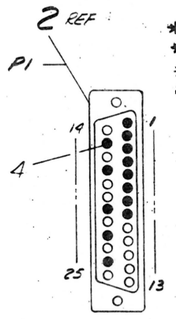

VIEW A-A
WITH HOOD REMOVED
SCALE: NONE

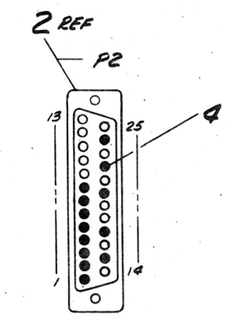

VIEW B-B
WITH HOOD REMOVED
SCALE: NONE

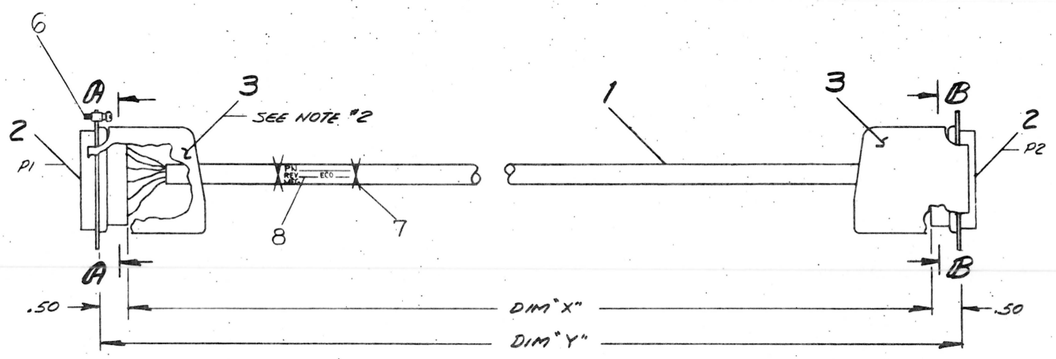

ITEM	DESCRIPTION	DWG./PART NO.	QTY
1	LABEL, CABLE	9009532	.8
2	TIE WRAP (SMALL)	9007031	7
4	SCREW, CAPTIVE ASSY.	90C9722	6
A/R	WIRE #26 AWG (GRN)	9107636-55	5
26	SOCKET, CRIMP	1210993-41	4
2	HOOD & STRAIN RELIEF	1210993-50	3
2	SHELL & INSERT	1210993-32	2
R/R	CABLE, (10 CONDUCTOR)	9107623	1

UNLESS OTHERWISE SPECIFIED DIMENSIONS ARE IN INCHES

ANGLES ±0° 30'	CLASS OF ACCURACY (CHECK ONE)	NOMINAL DIMENSION RANGE INCHES OVER 0 TO 0.2	OVER 0.2 TO 1.2	OVER 1.2 TO 4.0	OVER 4.0 TO 12.0	OVER 12.0 TO 40.0	OVER 40.0 TO 80.0
SURFACE QUALITY IN MICROINCHES	MEDIUM ☐	±.004	±.008	±.012	±.016	±.024	±.04
	PREFERRED ☐	±.012	±.016	±.025	±.04	±.063	±0.1

QUANTITY & VARIATION

THIRD ANGLE PROJECTION

REMOVE BURRS AND BREAK SHARP CORNERS

DO NOT SCALE DWG

MATERIAL: SEE PARTS LIST

FINISH

DRWN P. Lee 8 Sept 75
CHK'D Rob Cormier 12-3-75
ENG. Jon Roberts 12/5/75
PROJ. ENG. Rob Cormier 12-3-75
PROD. R. Wall 12-3-75
NEXT HIGHER ASSY.
SCALE 1/1
SHEET 1 OF 2

FIRST USED ON DZ11

digital

TITLE: NULL MODEM CABLE ASSY.

SIZE D | CODE IA | NUMBER BCØ3P-Ø-Ø | REV. B

DIST.

REVISIONS	CHK.	CHANGE NO.	REV.
	[illegible]	BCØ3P-0001	A
	[illegible]	BCØ3P-00002	B

J. ROBERTS 6 May 77
R. CORMIER

DEC FORM NO. DRD 100-C

SIZE D | CODE IA | NUMBER BCØ3P-Ø-Ø | REV. B

"THIS DRAWING AND SPECIFICATIONS, HEREIN, ARE THE PROPERTY OF DIGITAL EQUIPMENT CORPORATION AND SHALL NOT BE REPRODUCED OR COPIED OR USED IN WHOLE OR IN PART AS THE BASIS FOR THE MANUFACTURE OR SALE OF ITEMS WITHOUT WRITTEN PERMISSION.
COPYRIGHT © 1975, DIGITAL EQUIPMENT CORPORATION"

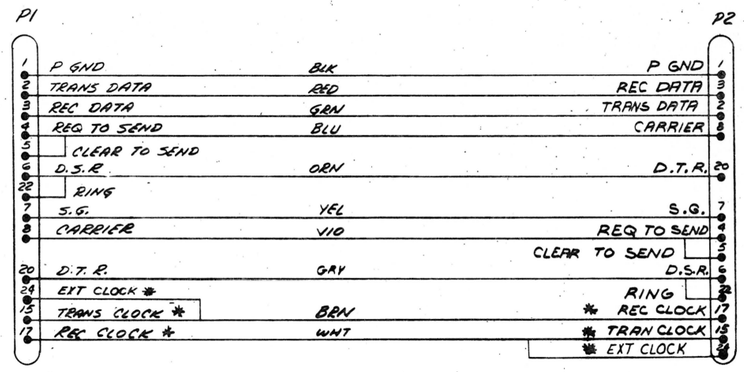

* SEE NOTE *1

REVISIONS		
CHK	CHANGE NO.	REV.

TITLE	SIZE	CODE	NUMBER	REV.
NULL MODEM CABLE ASSY	D	IA	BCØ3P-Ø-Ø	B
SCALE NONE SHEET 2 OF 2	DIST.			

DEC FORM NO DRD 137

"THIS DRAWING AND SPECIFICATIONS, HEREIN, ARE THE PROPERTY OF DIGITAL EQUIPMENT CORPORATION AND SHALL NOT BE REPRODUCED OR COPIED OR USED IN WHOLE OR IN PART AS THE BASIS FOR THE MANUFACTURE OR SALE OF ITEMS WITHOUT WRITTEN PERMISSION.
COPYRIGHT © 1977 , DIGITAL EQUIPMENT CORPORATION"

WIRE TABLE

ITEM NO	DESCRIPTION AWG	COLOR	FROM CONN	WITH	TO CONN	WITH
2	#30		P1 - 1	1	P2 - 2	1
			P1 - 2		P2 - 1	
			P1 - 3		P2 - 4	
			P1 - 4		P2 - 3	
			P1 - 5		P2 - 6	
			P1 - 6		P2 - 5	
			P1 - 7		P2 - 8	
			P1 - 8		P2 - 7	
			P1 - 9		P2 - 10	
			P1 - 10		P2 - 9	
			P1 - 11		P2 - 12	
			P1 - 12		P2 - 11	
			P1 - 13		P2 - 14	
			P1 - 14		P2 - 13	
			P1 - 15		P2 - 16	
			P1 - 16		P2 - 15	
			P1 - 17		P2 - 18	
			P1 - 18		P2 - 17	
			P1 - 19		P2 - 20	
			P1 - 20		P2 - 19	
			P1 - 21		P2 - 22	
			P1 - 22		P2 - 21	
			P1 - 23		P2 - 24	
			P1 - 24		P2 - 23	
	#30		P1 - 25	1	P2 - 26	1

WIRE TABLE

ITEM NO	DESCRIPTION AWG	COLOR	FROM CONN	WITH	TO CONN	WITH
2	#30		P1 - 26		P2 - 25	
			P1 - 27		P2 - 28	
			P1 - 28		P2 - 27	
			P1 - 29		P2 - 30	
			P1 - 30		P2 - 29	
			P1 - 31		P2 - 32	
			P1 - 32		P2 - 31	
			P1 - 33		P2 - 34	
			P1 - 34		P2 - 33	
			P1 - 35		P2 - 36	
			P1 - 36		P2 - 35	
			P1 - 37		P2 - 38	
			P1 - 38		P2 - 37	
			P1 - 39		P2 - 40	
			P1 - 40		P2 - 39	
			P1 - 41		P2 - 42	
			P1 - 42		P2 - 41	
			P1 - 43		P2 - 44	
			P1 - 44		P2 - 43	
			P1 - 45		P2 - 46	
			P1 - 46		P2 - 45	
			P1 - 47		P2 - 48	
			P1 - 48		P2 - 47	
			P1 - 49		P2 - 50	
	#30		P1 - 50	1	P2 - 49	1

LEGEND

NUMBER	DIM "X" VARIATION	DIM "Y" (PRECUT) REF
BCØ6L-ØJ	8 IN ± .5 IN	9 IN ± .5 IN
BCØ6L-1K	1 FT 9 IN ± 1 IN	1 FT 10 IN ± 1 IN
BCØ6L-7K	7 FT 9 IN ± 2 IN	7 FT 10 IN ± 2 IN
BCØ6L-48	4 FT 2 IN ± 2 IN	4 FT 3 IN ± 2 IN

NOTES:

1. "CABLE" (ITEM #2) CONTAINS A TWIST SECTION EVERY 21 INCHES. THERE MUST BE AN ODD NUMBER OF TWIST SECTIONS IN EVERY BCØ6L LENGTH VARIATION.
2. IF RED STRIPING APPEARS ON "CABLE" (ITEM #2) IT IS TO BE POSITIONED AS SHOWN

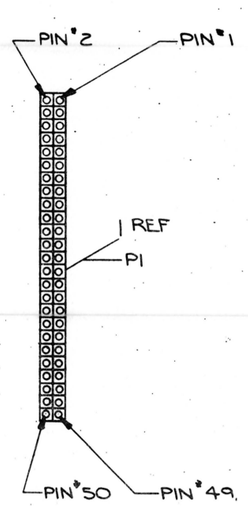

VIEW A-A

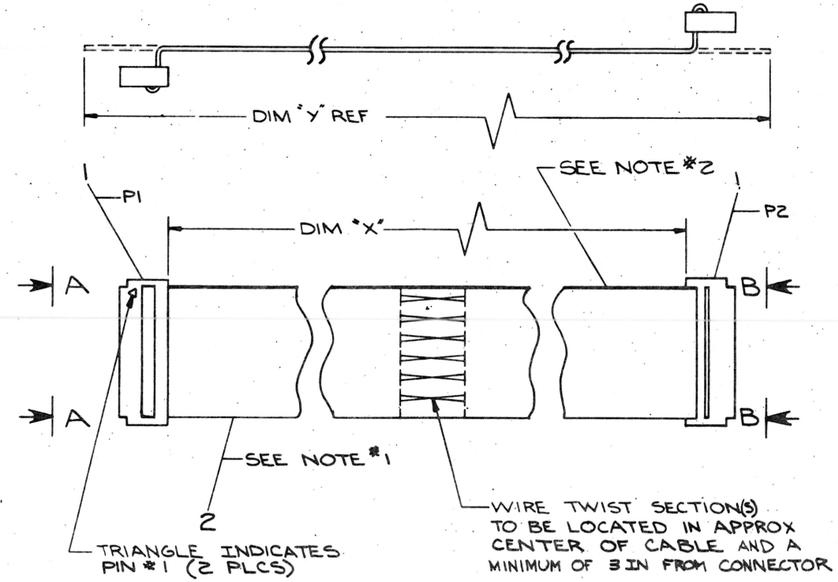

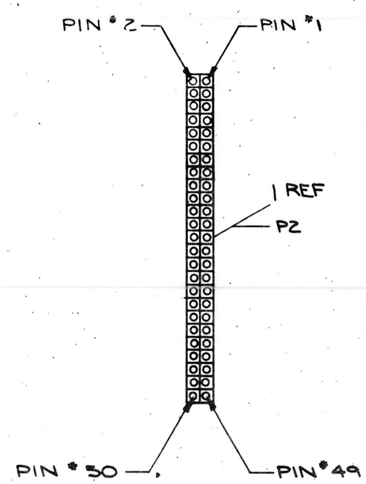

VIEW B-B

REVISIONS		
CHK	CHANGE NO.	REV.
JC	BCØ6L-00001	A

G. Bruce 12-MAR-77
T. ORR
Tony Orr 14-MAR-77

A/R			
A	CABLE, RIBBON 50 COND	17000081-01	2
2	CONN 50 PIN SKT	12116664-00	1
	DESCRIPTION	DWG./PART NO.	ITEM NO.

UNLESS OTHERWISE SPECIFIED DIMENSIONS ARE IN INCHES

	CLASS OF ACCURACY (CHECK ONE)	NOMINAL DIMENSION RANGE INCHES OVER 0 TO 0.2	OVER 0.2 TO 1.2	OVER 1.2 TO 4.0	OVER 4.0 TO 12.0	OVER 12.0 TO 40.0	OVER 40.0 TO 80.0
ANGLES 10' 30'							
SURFACE QUALITY IN MICROINCHES	MEDIUM ☐	±.005	±.008	±.012	±.016	±.024	±.04
	PRECISION ☐	±.012	±.016	±.025	±.04	±.063	±0.1

QUANTITY & VARIATION

THIRD ANGLE PROJECTION

REMOVE BURRS AND BREAK SHARP CORNERS

DO NOT SCALE DWG

MATERIAL SEE PARTS LIST

FINISH

DRAWN J. Cole 11-JAN-77
CHK [illegible] 7-DEC-77
ENG. [illegible] 7DEC77
PROJ. ENG. [illegible] 7 DEC 77
PROD. Anne Cable 7DEC77
NEXT HIGHER ASSY.
SCALE
SHEET 1 OF 1

FIRST USED ON H7004-C

digital

TITLE
MIRROR IMAGE CABLE

SIZE	CODE	NUMBER	REV.
D	UA	BCØ6L - Ø - Ø	A

DIST.

BDC FORM NO. BBS 100-C

DIGITAL EQUIPMENT CORPORATION
MAYNARD, MASSACHUSETTS

PARTS LIST

MADE BY K. DAVIS	CHECKED P. CAPPABIANCA	SECTION
DATE 4 MAY 76	DATE 14 MAY 76	1
ENG R. CORMIER	PROD T. McCABE	ISSUED SECT.
DATE 5-13-76	DATE 5-14-76	1

ITEM NO.	DWG NO. / PART NO.	DESCRIPTION	DZ11-A	DZ11-B	DZ11-E	DZ11-C	DZ11-D	DZ11-F	DZ11-AA	DZ11-BA	DZ11-EA
23	D-UA-H3190-0-0	CONNECTOR, TURN AROUND (20 MA)	-	-	-	1	1	2	-	-	-
24	D-IA-BCØ5W-8	50 CONDUCTOR SIGNAL CABLE (BCØ5W)	-	-	-	-	-	-	1	1	2
		*THIS LIBRARY IS A BOOK THAT INCLUDES									
		THE DZ11 DEC/X11 SYSTEM EXERCISER									
		LISTING (MAINDEC-11-DXDZA-REV-D).									

TITLE	ASSY NO.	SIZE	CODE	NUMBER	REV.	ECO NO.
SHIPPING LIST DZ11	D-UA-DZ11-Ø-Ø	A	PL	DZ11-Ø-5	E	DZ11-MKØØ6
	SHEET 2 OF 2	DIST.				

DEC FORM DRA 110 DEC 16-(325)-1031-N870

NIK

DIGITAL EQUIPMENT CORPORATION
MAYNARD, MASSACHUSETTS

PARTS LIST

MADE BY K. DAVIS	CHECKED P. Cappabianca	SECTION
DATE 4 MAY 76	DATE 14 May 76	
ENG Robert D. Cormier	PROD Tom McCabe	ISSUED SECT.
DATE 5-13-76	DATE 5-14-76	

ITEM NO.	DWG NO. / PART NO.	DESCRIPTION	DZ11-A	DZ11-B	DZ11-E	DZ11-C	DZ11-D	DZ11-F	DZ11-AA	DZ11-BA	DZ11-EA
1	D-UA-M7819-Ø-Ø	8 LINE EIA ASYNCHRONOUS MUX	1	1	2	-	-	-	1	1	2
2	D-UA-H3271-0-0	CONNECTOR, TURN AROUND (EIA)	1	-	1	-	-	-	1	1	1
3	D-IA-BCØ5W-15	5Ø CONDUCTOR SIGNAL CABLE (BCØ5W)	1	1	2	-	-	-	-	-	-
4	EK-DZ11Ø-OP-ØØ1	MANUAL, USER'S	1	-	1	1	-	1	1	-	1
5	ZJ223-RB	DIAGNOSTIC SOFTWARE KIT	1	-	1	1	-	1	1	-	1
6	B-TC-DZ11-Ø-6	DZ11-A,B&E PRINT SET (MPØØ132)	1	1	1	-	-	-	1	1	1
~~7~~	~~B-TC-DZ11-Ø-10~~	~~DZ11-B PRINT SET~~	-	1	-	-	-	-			
8	D-CS-H325-Ø-1	H325 TEST CONNECTOR	1	-	1	-	-	-	1	-	1
9	D-UA-H317-E-Ø	H317 CABLE BOX ASSY (EIA)	1	-	1	-	-	-	1	-	1
10	MAINDEC-11-DXQLL	DEC/X11 LIBRARY *	1	-	1	1	-	1	1	-	1
11	C-IA-BC08S-15	40 CONDUCTOR SIGNAL CABLE (BC08S)	-	-	-	1	1	2	-	-	-
12	D-UA-H317-F-0	H317 CABLE BOX ASS (20 MA)	-	-	-	1	-	1	-	-	-
13	B-TC-DZ11-0-11	DZ11 C,D & F PRINT SET (MPØØ253)	-	-	-	1	1	1	-	-	-
~~14~~	~~B-TC-DZ11-0-12~~	~~DZ11-D PRINT SET~~	-	-	-	-	1	-			
15	D-UA-M7814-0-0	8 LINE 20MA ASYNCRONOUS MUX	-	-	-	1	1	2	-	-	-
16	MAINDEC-11-DZDZB-REV-D	ITEP LISTING	1	-	1	-	-	-	1	-	1
17	MAINDEC-11-DZDZB-REV-PB	ITEP OVERLAY TAPE	1	-	1	-	-	-	1	-	1
18	D-IA-7415808-0-0	CONNECTOR MTG PANEL	1	-	1	1	-	1	1	-	1
19	1214614-01	FILTERED CONNECTOR (40 POS)	-	-	-	1	1	2	-	-	-
20	1214614-02	FILTERED CONNECTOR (50 POS)	1	1	2	-	-	-	1	1	2
21	D-UA-BC06K-ØJ	MIRROR IMAGE CABLE (40 POS)	-	-	-	1	1	2	-	-	-
22	D-UA-BC06L-ØJ	MIRROR IMAGE CABLE (50 POS)	1	1	2	-	-	-	1	1	2

TITLE	ASSY NO.	SIZE	CODE	NUMBER	REV.	ECO NO.
SHIPPING LIST DZ11	D-UA-DZ11-Ø-Ø	A	PL	DZ11-Ø-5	E	DZ11-MKØØ6
	SHEET 1 OF 2	DIST.				

DEC FORM DRA 110 DEC 16-(325)-1031-N870

MK

THESE DRAWINGS AND SPECIFICATIONS, AS AN UNPUBLISHED WORK OF AUTHORSHIP, CONTAINING THE TRADE SECRET OF ALLIED SIGNAL INC. ARE TO BE USED BY OR DISCLOSED TO YOUR EMPLOYEES FOR MANUFACTURING PURPOSES ONLY AND NOT TO BE DISCLOSED TO ANY THIRD PARTY WITHOUT THE WRITTEN CONSENT OF ALLIED SIGNAL AEROSPACE COMPANY, GARRETT AVIATION GROUP.
COPYRIGHT © 1998 ALLIED SIGNAL AEROSPACE COMPANY

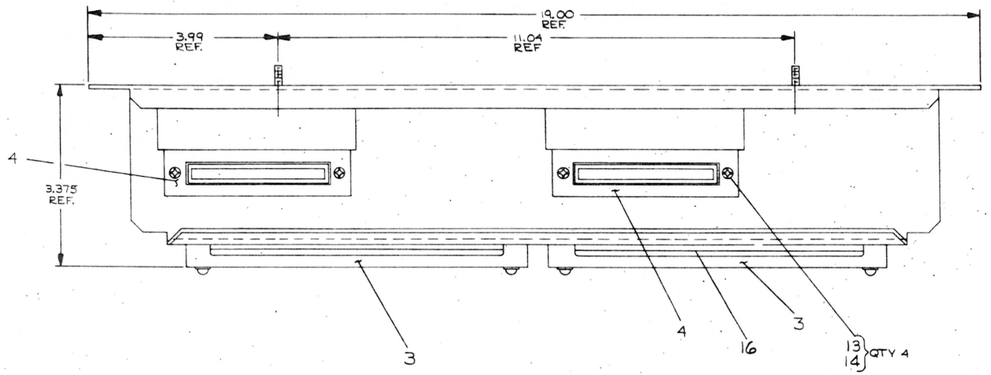

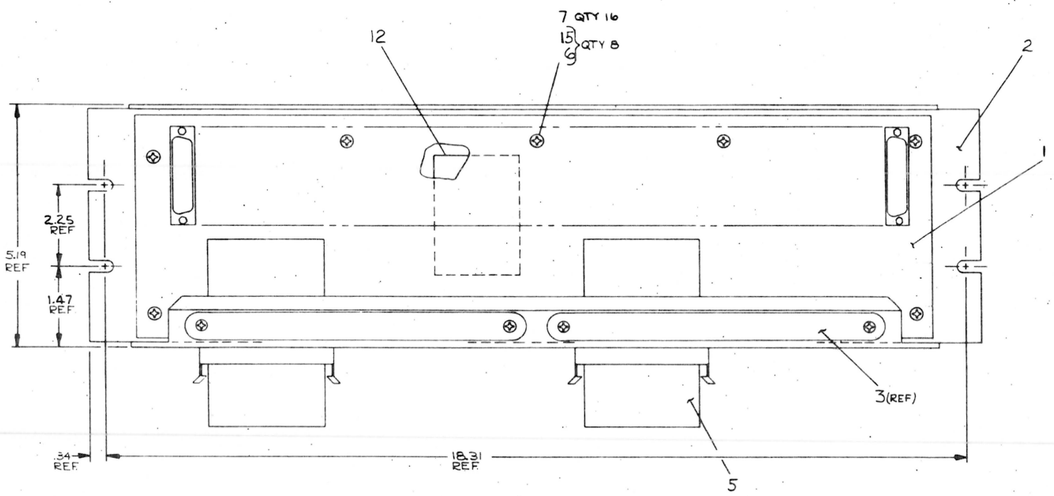

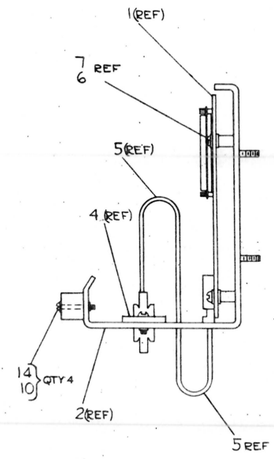

A/R	FOAM TAPE ADHV. 1/8×.50	9009087-01	16
8	WASHER, INT TOOTH LOCK #8	9006634	15
8	WASHER, INT TOOTH LOCK #6	9006633	14
4	SCR. PAN HD #6-32×5/16 LG	9006021-01	13
1	LABLE, CABLE ID.	3616073-00	12
~~8~~	~~WASHER, EXT TOOTH LOCK #8~~	~~9008072-00~~	~~11~~
4	SCR, PAN HD. #6-32 X .75 LG	9006026-01	10
~~8~~	~~WASHER, EXT TOOTH LOCK #6~~	~~9007649-00~~	~~9~~
~~4~~	~~SCR, PAN HD #6-32 X .50 LG~~	~~9006024-01~~	~~8~~
16	WASHER, NYLON #8	9006708-00	7
8	SCR, PAN HD. #8 32 X .38 LG	9006037-01	6
2	CABLE,	BC06L-0J	5
2	FILTER, EMI	H7004-C	4
2	BAR, CABLE HOLD DOWN	1213318	3
1	PANEL, MOUNTING	E-IA-742/9650-0	2
1	D211 DIST PANEL (EIA)	5411928	1
	DESCRIPTION	DWG./PART NO.	ITEM NO.

REVISIONS			
ZONE	CHANGE NO.	REV.	
A/R	7016469-HR001	A	Per Memo 9-Nov-98 JIM MUELLER QT

UNLESS OTHERWISE SPECIFIED DIMENSIONS ARE IN INCHES

ANGLES ±2° 30'	CLASS OF ACCURACY	NOMINAL DIMENSION RANGE (INCHES)					
		0 TO 6	OVER 6 TO 12	OVER 12 TO 24	OVER 24 TO 48	OVER 48 TO 72	OVER 72 TO 96
SURFACE QUALITY 125	MEDIUM	±.030	±.050	±.090	±.150	±.200	±.250
MICROINCHES	PREFERRED	±.010	±.020	±.030	±.050	±.080	±.100

QUANTITY & VARIATION

THIRD ANGLE PROJECTION

RESERVE BORED AND BROACH GUIDED CONNECTORS

DO NOT SCALE DWG

MATERIAL: SEE PARTS LIST

FINISH: NONE

DRN: T.P. Gilbert 6 SEPT 98
CHK'D: J. Nagel 9-Sept-98
ENG: B.K. Olson 9 Sept 98
PROD. ENG: B. Kolb 9 Sept 98
PROD:
NEXT HIGHER ASSY.: D-UA-KS10-0-0
SCALE: 1/1
SHEET 1 OF 1

FIRST USED ON: KS10 20-0120

TITLE: ASSY, EIA PANEL WITH FILTERS

SIZE: B | CODE IDENT NO.: AD | NUMBER: 7016469-0-0 | REV.: A

MR

digital EQUIPMENT CORPORATION MAYNARD MASSACHUSETTS

DRAWING DIRECTORY

"THIS DRAWING AND SPECIFICATIONS, HEREIN, ARE THE PROPERTY OF DIGITAL EQUIPMENT CORPORATION AND SHALL NOT BE REPRODUCED OR COPIED OR USED IN WHOLE OR IN PART AS THE BASIS FOR THE MANUFACTURE OR SALE OF ITEMS WITHOUT WRITTEN PERMISSION. COPYRIGHT © 1975 , DIGITAL EQUIPMENT CORPORATION"

CUSTOMER PRINT SET INDEX

THIS IS PRINT SET ☐☐☐☐

SEQUENCE	
DRAWING DIRECTORY (DD11-D)	B-DD-DD11-D
BACK PLANE ASSY	C-AD-7011164-0-0
BACK PLANE ASSY (DD11DF)	C-AD-7012306-0-0
MODULE UTILIZATION (DD11-D)	D-MU-DD11-D-2
POWER HARNESS (BA11-K,BA11-L)	D-IA-7011108-0-0
POWER HARNESS (BA11-F,BA11-P)	D-IA-7011109-0-0
CIRCUIT SCHEMATIC (DD11-D)	D-CS-5411414-0-1
WIRE LIST (COMPLETE)	K-WL-DD11-D-1

NOTE: DD11DK ASSEMBLIES ARE ELECTRICALLY INCOMPATIBLE WITH DD11DF ASSEMBLIES. A DD11DK WILL WORK IN BA11-L AND BA11-K BOXES ONLY. A DD11DF WILL WORK IN BA11-F AND BA11-P BOXES ONLY.

UNIT VARIATIONS		PRINT SET
VAR	TITLE	1
DD11-DK	BACK PLANE ASSY(BA11L BA11K)	X
DD11-DF	BACK PLANE ASSY (BA11F BA11P)	X

REVISIONS		
DATE	CHG. NO.	REV
2-76	DD11D-00001	A
9-76	DD11D-00004	B
2-77	DD11D-00005	C

USED ON OPTION/MODEL		DRN.	DATE	TITLE
		M. BAPTISTE	5/12/75	DRAWING DIRECTORY DD11-D
		CHK'D. D. HEALY	DATE 5/15/75	
		PROJ ENG. Richard Barry	DATE 5/26/75	
		PROD R.W. Peters	DATE 6/17/75	SIZE B / CODE DD / NUMBER DD11-D / REV C
		FIELD SERV. Craig Mann	DATE 6-17-75	DIST
SHEET 1 OF 3				

DEC 16-12351-1062-14-8972

DRB 106

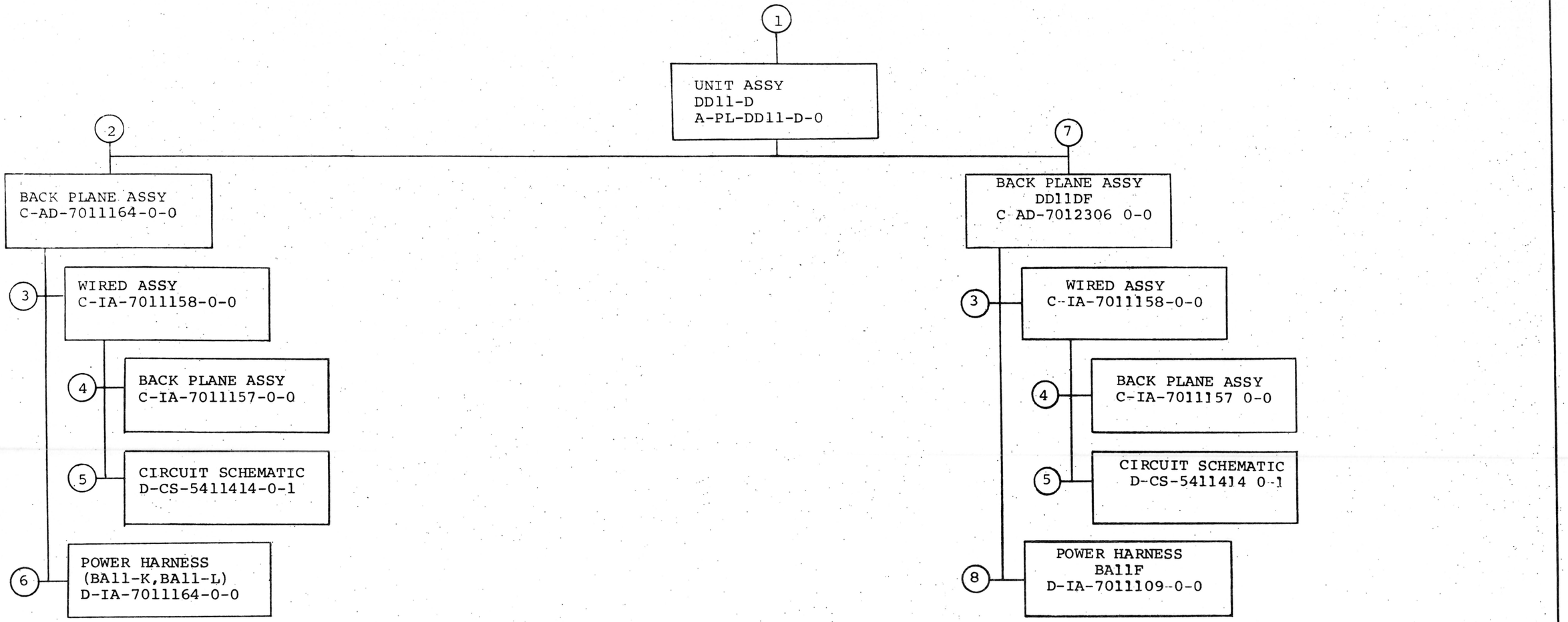

TITLE		SIZE	CODE	NUMBER	REV
DRAWING DIRECTORY DD11-D	SHEET 2 OF 3	B	DD	DD11-D	C

ELECTRICAL

CUSTOMER PRINT SET 1	MFG. SET	FIND NO.	DRAWING NO.	REV	NO OF SHT	DESCRIPTION	OPTION NO./FILE DATE
		1	A-PL-DD11-D-0		1	UNIT ASSY DD11-D	
X			D-MU-DD11-D-2		1	MODULE UTILIZATION	
X		2	C-AD-7011164-0-0		1	BACK PLANE ASSY DD11-DK	
		3	C-IA-7011158-0-0		1	WIRED ASSY	
X			K-WL-DD11-D-1	A	1	WIRE LIST	
			A-WT-7011158-0	REF	1	AWT REV STATUS	
X		5	D-CS-5411414-0-1			CIRCUIT SCHEMATIC	
X		6	D-IA-7011108-0-0		1	POWER HARNESS (BA11-K, BA11-L)	
X		7	C-AD-7012306-0-0		1	BACK PLANE ASSY DD11-DF	
X		8	D-IA-7011109-0-0		1	POWER HARNESS (BA11-F, BA11-P)	

MECHANICAL

CUSTOMER PRINT SET 1	MFG SET	FIND NO.	DRAWING NO.	REV	NO OF SHT	DESCRIPTION	OPTION NO./FILE DATE
		1	A-PL-DD11-D-0		1	UNIT ASSY DD11-D	
		2	C-AD-7011164-0-0		1	BACK PLANE ASSY DD11-DK	
		3	C-IA-7011158-0-0		1	WIRED ASSY	
			D-IA-5512405-0-0		1	OVERLAY, WIRING	
			B-DC-5308753-0-0		1	DECAL 21 POINT (LTR)	
			A-DC-7411881-0-0		1	LABEL, AWT REV STATUS	
		4	D-IA-7011157-0-0		1	BACK PLANE ASSY	
		5	D-CS-5411414-0-1			CIRCUIT SCHEMATIC	
			D-AH-5411414-0-4			ASSY/DRILLING HOLE LAYOUT	
			K-CO-5411414-0-5			X-Y COORDINATE HOLE LOCATION	
			B-MH-5411414-0-6			MODULE ECO HISTORY	
			5011413			ETCH CIRCUTI BOARD	
		6	D-IA-7011108-0-0		1	POWER HARNESS (BA11-K, BA11-L)	
X		7	C-AD-7012306-0-0		1	BACK PLANE ASSY DD11-DF	
X		8	D-IA-7011109-0-0		1	POWER HARNESS (BA11-F, BA11-P)	

CUSTOMER PRINT SET CODES

X = PRINT OF DOCUMENT INCLUDED IN PRINT SET
C = INCLUDES ALL PRINTS INDICATED ON DOCUMENT
S = CONFIDENTIAL AUTHORIZED SIGNATURE REQUIRED

TITLE		SIZE	CODE	NUMBER	REV
DRAWING DIRECTORY DD11-D	SHEET 3 OF 3	B	DD	DD11-D	C

DRB 108

DEC 16-(325)-1062-2B-R972

"THIS DRAWING AND SPECIFICATIONS, HEREIN, ARE THE PROPERTY OF DIGITAL EQUIPMENT CORPORATION AND SHALL NOT BE REPRODUCED OR COPIED OR USED IN WHOLE OR IN PART AS THE BASIS FOR THE MANUFACTURE OR SALE OF ITEMS WITHOUT WRITTEN PERMISSION.
COPYRIGHT © 1975 DIGITAL EQUIPMENT CORPORATION"

WIRE TABLE

FROM			TO	FROM			TO
COLOR	POINT	CONNECTION	SIGNAL	COLOR	POINT	CONNECTION	SIGNAL
BLUE	P4-13	SOLDER	-15V	BRN	P2-14	SOLDER	-5V
RED	P4-4	↑	+5V	BLK	P2-8	↑	GND
RED	P4-1	↑	+5V	GRAY	P2-2	↑	+15
BLK	P4-8	↑	GND	ORG	P2-3	↑	+20
ORG	P4-3	↑	+20V	BLK	P2-9	↓	GND
BLK	P4-9	↑	GND	RED	P2-12	SOLDER	+5B
WHT	P4-6	↑	+15B	ITEM 5	ITEM 6	SOLDER	GND
GRN	P4-15	↑	-15B				
YEL	P3-4	↑	ACLO				
BLK	P3-1	↑	GND				
BRN	P3-2	↑	LTC				
VIO	P3-3	↑	DCLO				
RED	P2-4	↓	+5V				
RED	P2-1	SOLDER	+5V				

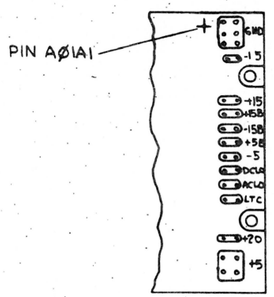

VIEW A

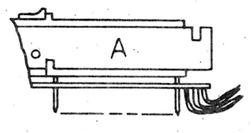

NOTES:

1. WHEN THE DD11-DK'S USED WITH A BA11-K EXPANSION BOX WITHOUT BATTERY BACK-UP (I.E., NO H785 NOR H7850), INSTALL THE THREE JUMPERS SHOWN:
   a) -15 TO -15B, b) +15 TO +15B, C) +5 TO +5B
   USE #20 SHIELDED BUS WIRE ON SIDE 2. THIS WILL PROVIDE POWER TO THE MOS MEMORY VOLTAGE RAILS. (SEE NOTE 3)
2. INSTALL ITEM #6 UNDER LOGIC FRAME MOUNTING SCREW TO TIE LOGIC GROUND TO CHASSIS GROUND.
3. BA11-K'S THAT USE THE 5410864-YA-1 POWER DISTRIBUTION (I.E., 11/34A, 11/34 WITH FP11-AU, AND SOME 11/04'S) AND HAVE MORE THAN ONE DD11-DK (OR AN ADDITIONAL DD11-CK) CAN ONLY HAVE THE +5 TO +5B JUMPER IN ONE OF THE BACK PANELS. IF TWO OF THE BACK PANELS HAVE THE JUMPER IN THE +5V REGULATORS MAY BE CONNECTED TOGETHER. TYPICALLY THIS JUMPER IS IN THE FIRST BACK PANEL, BUT IT MAY BE PLACED IN ONE OF THE OTHER BACK PANELS IF DEEMED NECESSARY FOR POWER REQUIREMENTS.

PARTS LIST

ITEM NO.	DESCRIPTION	PART NO.	QTY.
1	TERMINAL, SOLDER	9008150	6
2"	WIRE, BLK STRD #14	9107370-00	5
6"	TUBING, #20 (CLEAR)	9107267-10	4
6"	WIRE, BUS # 20	9107560-02	3
1	POWER HARNESS (BA11-K, BA11-L)	D-IA-7011108-0-0	2
1	WIRED ASSY DD11-D	C-IA-7011158-0-0	1

FIRST USED ON OPTION/MODEL: DD11-DK

DIMENSIONAL TOLERANCE
DIMENSIONS ARE INCHES UNLESS OTHERWISE SPECIFIED

MILLIMETERS	INCHES	ANGLES
X,XX = ±0,10	.XXX = ±.005	±0° 30'
X,X = ±0,5	.XX = ±.02	
X = ±2,	.X = ±.1	

THIRD ANGLE PROJECTION

REMOVE BURRS AND BREAK SHARP CORNERS SURFACE QUALITY ✓

MATERIAL SEE PARTS LIST

FINISH +/+

		DATE
DRN	L. Phillen	5/20/75
CHK'D	D. Keely	5/21/75
ENG.	Richard Barry	DATE
PROJ. ENG.	Richard Barry	5/28/75
PROD.	K.K. Peterson	6/6/75

NEXT HIGHER ASSY. A-PL-DD11-D-0

SCALE +/+

SHEET 1 OF 1

digital

TITLE: BACKPLANE ASS'Y (DD11-DK)

SIZE	CODE	NUMBER	REV.
C	AD	7011164-0-0	C

DIST.

REVISIONS			
CHK	CHANGE NO.		REV.
BC	7011164-00001	E. Cannon 12 DEC 75	A
		R. BARRY R. Barry 15 OCT 75	
G.P.	DD11D-00004	D. Chiasson 13 Oct. 76	B
		D. BARRY R. Barry 13 JAN 76	
A.C.	DD11D-00006	D. Zwicker 6 MAY 77	C
		R. BARRY R. Barry 9 MAY 77	

DEC FORM NO. BRC 109-0

TW 1

"THIS DRAWING AND SPECIFICATIONS, HEREIN, ARE THE PROPERTY OF DIGITAL EQUIPMENT CORPORATION AND SHALL NOT BE REPRODUCED OR COPIED OR USED IN WHOLE OR IN PART AS THE BASIS FOR THE MANUFACTURE OR SALE OF ITEMS WITHOUT WRITTEN PERMISSION.
COPYRIGHT © 1975 DIGITAL EQUIPMENT CORPORATION"

WIRE TABLE

FROM			TO	FROM			TO
COLOR	POINT	CONNECTION	SIGNAL	COLOR	POINT	CONNECTION	SIGNAL
BLU	P4-13	SOLDER	-15 V	BRN	P2-14	SOLDER	-5V
RED	P4-4	↓	+5V	BLK	P2-8	↓	GND
RED	P4-1	↓	+5V	GRY	P2-2	↓	+15
BLK	P4-8	↓	GND	ORN	P2-3	↓	+20
ORN	P4-3	↓	+20V	BLK	P2-9	↓	GND
BLK	P4-9	↓	GND	RED	P2-10	SOLDER	+5 B
WHT	P4-6	↓	+15 B	ITEM #5	ITEM #6	SOLDER	GND
GRN	P4-15	↓	-15 B				
YEL	P3-4	↓	AC LO				
BLK	P3-1	↓	GND				
BRN	P3-2	↓	LTC				
VIO	P3-3	↓	DC LO				
RED	P2-4	↓	+5V				
RED	P2-1	SOLDER	+5V				

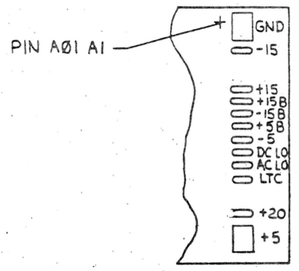

VIEW "A"

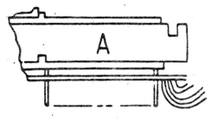

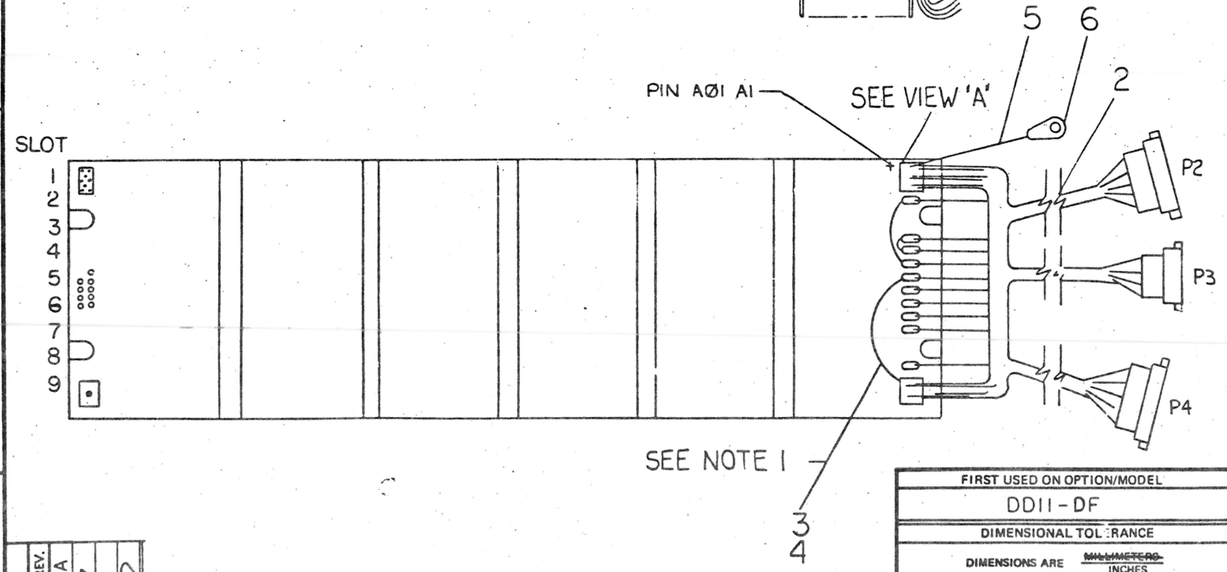

NOTES:

1. WHEN DD11-DF IS USED WITH A BA11-F EXP. BOX WITHOUT BATTERY BACK UP INSTALL THE THREE JUMPERS SHOWN:
   1) -15 TO -15 B
   2) +15 TO +15 B
   3) +5 TO +5 B
   USE #20 INSULATED BUS WIRE ON SIDE 2. THIS WILL PROVIDE POWER TO THE MOS MEM VOLTAGE RAILS.
2. INSTALL ITEM #6 UNDER LOGIC FRAME MTG. SCREW TO TIE LOGIC GROUND TO CHASSIS GROUND.
3. THE BA11-F POWER HARNESS ITEM #2 IS NOT ELECTRICALLY COMPATIABLE WITH THE BA11-L OR BA11-K MOUNTING BOX.

ITEM NO.	QTY.	DESCRIPTION	PART NO.	
		PARTS LIST		
1	1	TERMINAL, SOLDER	9008150	6
2	AIR	WIRE, BLK STRD #14	9107370-00	5
3	AIR	TUBING, #20 (CLEAR)	9107267-10	4
4	A/R	WIRE, BUS # 20	9107560-03	3
5	1	POWER HARNESS BA11-F	D-IA-7011109-0-0	2
6	1	WIRED ASSY DD11-D	C-IA-7011158-0-0	1

FIRST USED ON OPTION/MODEL: DD11-DF

DIMENSIONAL TOLERANCE
DIMENSIONS ARE ~~MILLIMETERS~~ INCHES
UNLESS OTHERWISE SPECIFIED

MILLIMETERS	INCHES	ANGLES
~~X.XX = ±0.10~~	~~.XXX = ±.005~~	±0° 30'
~~X.X = ±0.5~~	~~.XX = ±.02~~	
~~X = ±1~~	.X = ±.1	

THIRD ANGLE PROJECTION

REMOVE BURRS AND BREAK SHARP CORNERS SURFACE QUALITY ✓

MATERIAL: SEE PARTS LIST
FINISH

DRN.	R Beasley	DATE 12-18-75
CHK'D	D. Zwicker	DATE 12-18-75
ENG.	Richard Barry	DATE 3-10-76
PROJ. ENG.	Richard Barry	DATE 3-10-76
PROD.	R.J. MacDonald	DATE 3-16-76

NEXT HIGHER ASSY.: A-PL-DD11-DF-0
SCALE
SHEET 1 OF 1

digital

TITLE: BACK PLANE ASSY (DD11-DF)

SIZE C | CODE AD | NUMBER 7012306-0-0 | REV. A
DIST.

REVISIONS			
	CHK	CHANGE NO.	REV.
	RC	DD11D-00006	A
	D Zwicker 5 May 77		
	R. BARRY		
	R. Barry 9 MAY 77		

DEC FORM NO. DNC 100-0

SIZE C | CODE AD | NUMBER 7012306-0-0 | REV. A

"THIS DRAWING AND SPECIFICATIONS, HEREIN, ARE THE PROPERTY OF DIGITAL EQUIPMENT CORPORATION AND SHALL NOT BE REPRODUCED OR COPIED OR USED IN WHOLE OR IN PART AS THE BASIS FOR THE MANUFACTURE OR SALE OF ITEMS WITHOUT WRITTEN PERMISSION.
COPYRIGHT ©1975, DIGITAL EQUIPMENT CORPORATION"

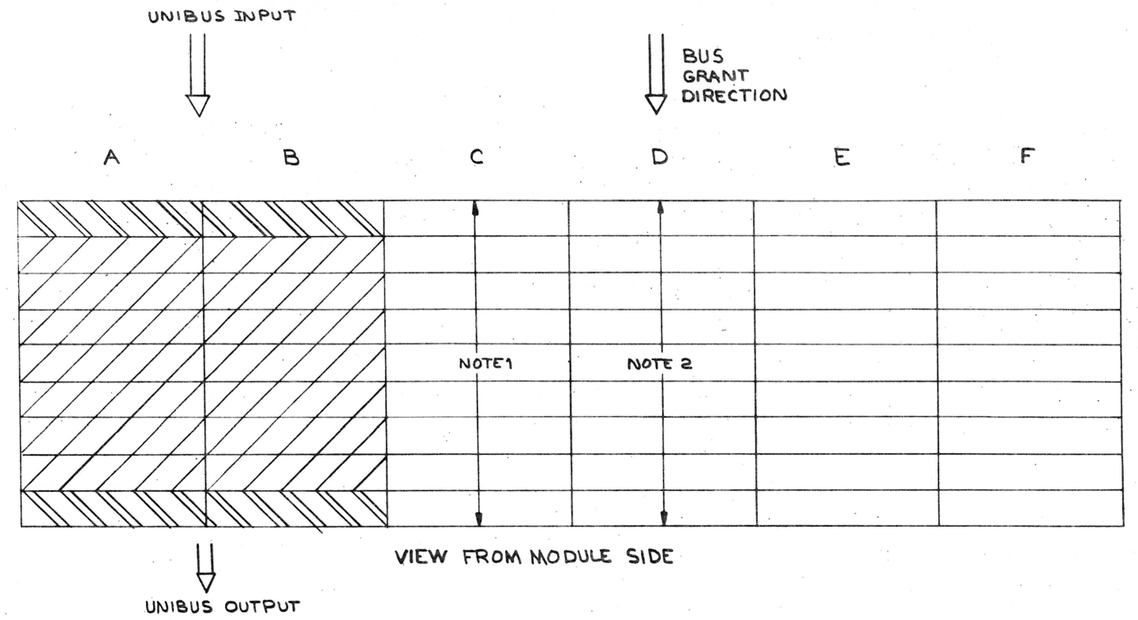

NOTES:

1. REMOVE CA1 TO CB1 WIRE WRAP JUMPER TO INSTALL AN NPR OPTION IN ANY SPC SLOT.
2. G727 REQUIRED IN ANY UNUSED SPC SLOT TO PROVIDE BUS GRANT CONTINUITY.
3. GRANT DIRECTION IS SLOT 1 TO SLOT 9.
4. USE M9202 TO INTERCONNECT SYSTEM UNITS INSTEAD OF M920. M9202 IS A 2 FT. UNIBUS JUMPER CABLE USED TO DISTRIBUTE UNIBUS LOADING.
5. M9302 (SACK/TERM) AND M930 (TERM) MUST NEVER BE INSTALLED IN ANY SLOT OTHER THAN SLOT 9 (A & B). POWER SUPPLY VOLTAGES WILL BE SHORTED OUT IF THESE TERMINATORS ARE MOUNTED IN THE MODIFIED UNIBUS SLOTS.
6. MODIFIED UNIBUS SECTION CARRIES CORE AND MOS MEMORY VOLTAGE RAILS AND MEMORY PARITY CONTROL SIGNALS INSTEAD OF BUS GRANT AND SOME GND SIGNALS THAT ARE CONTAINED IN STANDARD UNIBUS SLOTS.

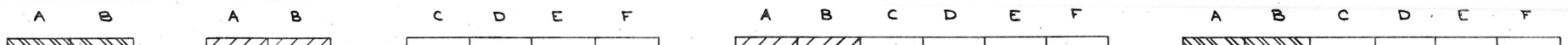

STANDARD UNIBUS
(SLOT 1-9)
DUAL MODULES WHICH PLUG INTO STANDARD UNIBUS SLOTS ONLY:
BC11A UNIBUS CABLE
M9302 SACK/TERM (NOTE5)
M920 (NOTE4)
M930 (NOTE5)
M9202 (NOTE4)

MODIFIED UNIBUS
(SLOT 2-8)
DUAL MODULES WHICH PLUG INTO THE MODIFED UNIBUS ONLY:
M9301 BOOT/TERM.
M9306 TERM.
M7850 PARITY CONT.

SMALL PERIPHERAL CONTROLLER
(SLOT 1-9)
ANY S.P.C. OPTION

HEX MODULE WITH MODIFIED UNIBUS SIGNALS
(SLOTS 2-8)
HEX MODULES THAT PLUG INTO MODIFIED UNIBUS ONLY:
M7847 MOS MEMORY (MS11-EP-JP)
MM11-BP, CP, DP OR YP CORE MEMORY

HEX MODULE WITH STANDARD UNIBUS SIGNALS
SLOT 1 ONLY
M7263 PDP11Ø4 CPU MODULE

GENERAL
ANY HEX MODULE THAT MEETS THE FOLLOWING REQUIREMENTS CAN BE MOUNTED IN THESE SLOTS.
1.) THOSE PINNED TO TAKE SIGNALS FROM MODIFIED UNIBUS (A&B) WITH THE BUS GRANTS TAKEN FROM SPC SLOTS ie: ABOVE
2.) THOSE PINNED TO TAKE SIGNALS FROM STANDARD SPC PINNING WITH THE EXCEPTION OF POWER FROM (A&B). ie: SPECIAL OPTIONS

REVISIONS		
CHK.	CHANGE NO.	REV.
JCM	DD11-D-00007	A

B. BERNSTEIN

DESCRIPTION	DWG./PART NO.	ITEM NO.

UNLESS OTHERWISE SPECIFIED DIMENSIONS ARE IN INCHES

ANGLES ±0° 30'	CLASS OF ACCURACY (CHECK ONE)	NOMINAL DIMENSION RANGE INCHES					
		OVER 0 TO 0.2	OVER 0.2 TO 1.3	OVER 1.3 TO 4.0	OVER 4.0 TO 12.0	OVER 12.0 TO 40.0	OVER 40.0 TO 80.0
SURFACE QUALITY IN MICROINCHES	MEDIUM ☐	±.004	±.008	±.012	±.016	±.024	±.04
	PREFERRED ☐	±.012	±.016	±.025	±.04	±.063	±0.1

QUANTITY & VARIATION

THIRD ANGLE PROJECTION

REMOVE BURRS AND BREAK SHARP CORNERS

DO NOT SCALE DWG

MATERIAL

FINISH

DRN. [illegible]	4/28/75	FIRST USED ON
CHK'D D. Neal	5/21/75	digital
ENG. R. Rapp	5/28/75	
PROJ. ENG. R. Rapp	5/28/75	
PROD. R. K. Peterson	6/4/75	

NEXT HIGHER ASSY. B-DD-DD11-D

SCALE

SHEET 1 OF 1

TITLE
MODULE UTILIZATION
(DD11-D)

SIZE	CODE	NUMBER	REV.
D	MU	DD11-D-2	A

DIST.

REV. A
NUMBER DD11-D-2
SIZE D CODE MU

DEC FORM NO. DRD 100-C

"THIS D ING AND SPECIFICATIONS, HEREIN, ARE THE PROPERTY OF DIGITAL EQUIPMENT CORPORATION AND SHALL NOT BE REPRODUCED OR COPIED OR USED IN WHOLE OR IN PART AS THE BASIS FOR THE MANUFACTURE OR SALE OF ITEMS WITHOUT WRITTEN PERMISSION.
COPYRIGHT © 1975, DIGITAL EQUIPMENT CORPORATION"

NOTES:

1. USE TIE WRAPS (X) ITEM#4 AT BREAKOUT POINTS SHOWN
2. DOT (•) INDICATES NAIL LOCATION FOR ASS'Y USE ONLY. COVER NAILS WITH SHINK TUBING TO PREVENT CUTTING HARNESS.
3. WIRE LENGTH TOLERANCES WILL BE +1/8, -0 INCHES.
4. ALL CONN. SHOWN FROM WIRING SIDE.

WIRING TABLE

ITEM NO.	DESCRIPTION AWG	COLOR	FROM POINT	FROM CONNECTION	FROM WITH	TO POINT	TO CONNECTION	SIGNAL	LENGTH
9	#18	BLUE	1	P4-13	3	26	SOLDER	-15V	7
5	14	RED	2	P4-4	↑	37	↑	+5V	5
5	14	RED	3	P4-1	↑	38	↑	+5V	5
6	14	BLK	4	P4-8	↑	21	↑	GND	7.75
7	14	ORN	5	P4-3	↑	35	↑	+20V	5
6	14	BLK	6	P4-9	↑	22	↑	GND	8
13	18	WHT	7	P4-6	↑	28	↑	+15B	6.15
14	18	GRN	8	P4-15	↑	29	↑	-15B	6
12	18	YEL	9	P3-4	↑	33	↑	ACLO	4.25
6	14	BLK	10	P3-1	↑	23	↑	GND	6
10	18	BRN	11	P3-2	↑	34	↑	LTC	4.25
11	18	V10	12	P3-3	↑	32	↑	DCLO	4.25
5	14	RED	13	P2-4	↑	39	↑	+5V	7.50
5	14	RED	14	P2-1	↑	40	↑	+5V	7.25
10	18	BRN	15	P2-14	↑	31	↑	-5V	5
6	14	BLK	16	P2-8	↑	24	↑	GND	5
8	18	GREY	17	P2-2	↑	27	↑	+15	4.75
7	14	ORN	18	P2-3	↑	36	↑	+20	6.75
6	14	BLK	19	P2-9	↓	25	↓	GND	5.15
5	14	RED	20	P2-12	3	30	SOLDER	+5B	5

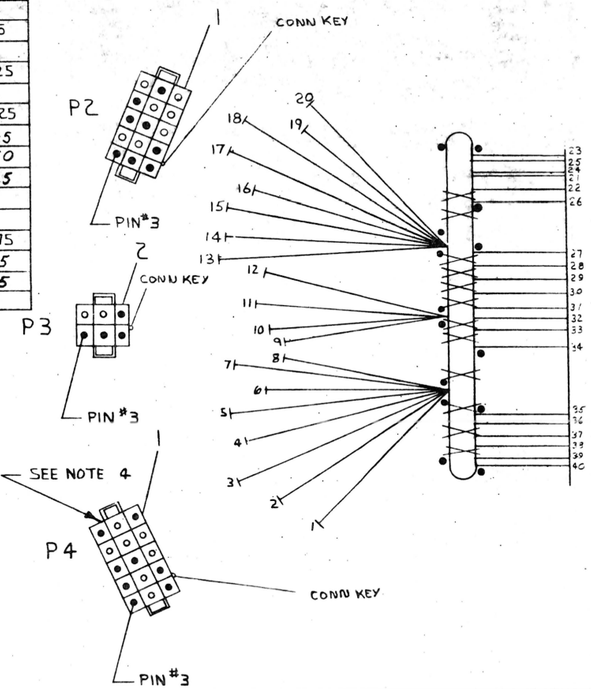

1	POWER HARNESS DECALS	7409872-2-0	15
A/R	WIRE #18 AWG, GRN	9107360-55	14
A/R	WIRE #18 AWG, WHT	9107360-99	13
A/R	WIRE #18 AWG, YEL	9107360-44	12
A/R	WIRE #18 AWG, V10	9107360-77	11
A/R	WIRE #18 AWG, BRN	9107360-11	10
A/R	WIRE #18 AWG. BLUE	9107360-66	9
A/R	WIRE #18 AWG, GREY	9107360-88	8
A/R	WIRE #14 AWG, ORN	9107370-33	7
A/R	WIRE #14 AWG, BLK	9107370-00	6
A/R	WIRE #14 AWG, RED	9107370-22	5
12	TIE WRAP	9007031	4
20	PIN MALE	1209378-01	3
1	CONN. 6 PIN HOUSING	1209351-06	2
2	CONN. 15 PIN HOUSING	1209351-15	1

FOR WIRE LENGTHS SEE WIRING TABLE

DESCRIPTION	DWG./PART NO.	ITEM NO.

DO NOT REDUCE

SCALE

0 IN — 6 IN — 12 IN

FOR MANUFACTURING PURPOSES ONLY

REVISIONS	CHK	CHANGE NO.	REV.
		7011108-00001	A
		7011108-000002	B

D. BARRY
P. PORRECA

UNLESS OTHERWISE SPECIFIED DIMENSIONS ARE IN INCHES											
ANGLES ±0° 30'	CLASS OF ACCURACY (CHECK ONE)		NOMINAL DIMENSION RANGE INCHES								
			OVER 0 TO 0.3	OVER 0.3 TO 1.3	OVER 1.3 TO 4.0	OVER 4.0 TO 12.0	OVER 12.0 TO 40.0	OVER 40.0 TO 80.0			
SURFACE QUALITY IN MICROINCHES	MEDIUM	☐	±.004	±.008	±.042	±.016	±.024	±.04			
	PREFERRED	☐	±.002	±.016	±.025	±.04	±.063	±0.1			

QUANTITY & VARIATION

7011108-0

THIRD ANGLE PROJECTION

REMOVE BURRS AND BREAK SHARP CORNERS

DO NOT SCALE DWG

MATERIAL SEE PARTS LIST

FINISH

DRN. John Nagle	9/11/75	FIRST USED ON DD11-D
CHK'D D. Neal	5/21/75	digital
ENG. R Barry		TITLE
PROJ. ENG. R Barry	5/26/75	POWER HARNESS (BAII-K, BAII-L)
PROD. R K Porrea	6/12/75	
NEXT HIGHER ASSY.		
C-AD-7011164-0-0		SIZE D CODE IA NUMBER 7011108-0-0 REV. B
SCALE 1/1		
SHEET OF		DIST.

SIZE D CODE IA NUMBER 7011108-0-0 REV. B

FORM NO. 100-C

"THIS DRAWING AND SPECIFICATIONS, HEREIN, ARE THE PROPERTY OF DIGITAL EQUIPMENT CORPORATION AND SHALL NOT BE REPRODUCED OR COPIED OR USED IN WHOLE OR IN PART AS THE BASIS FOR THE MANUFACTURE OR SALE OF ITEMS WITHOUT WRITTEN PERMISSION.
COPYRIGHT ©1975 DIGITAL EQUIPMENT CORPORATION"

WIRING TABLE

ITEM NO	DESCRIPTION AWG	COLOR	FROM POINT	FROM CONNECTION	WITH	TO POINT	TO CONNECTION	SIGNAL	LENGTH
9	18	BLU	1	P4-13	3	26	SOLDER	-15V	12.75
5	14	RED	2	P4-4	↑	37	↑	+5V	11
5	14	RED	3	P4-1		38		+5V	11.25
6	14	BLK	4	P4-8		21		GND	13.75
7	14	ORN	5	P4-3		35		+20V	11.0
6	14	BLK	6	P4-9		22		GND	13.25
13	18	WHT	7	P4-6		28		+15B	12.15
14	15	GRN	8	P4-15		29		-15B	11.6
12	18	YEL	9	P3-4		33		ACLO	10.25
6	14	BLK	10	P3-1		23		GND	12.1
10	18	BRN	11	P3-2		34		LTC	10.25
11	18	VIO	12	P3-3		32		DCLO	10.0
5	14	RED	13	P2-4		39		+5V	13.75
5	14	RED	14	P2-1		40		+5V	13.75
15	14	BRN	15	P2-14		31		-5V	11.0
6	14	BLK	16	P2-8		24		GND	11.0
8	18	GRY	17	P2-2		27		+15	10.75
7	14	ORN	18	P2-3		36		+20	13.0
6	14	BLK	19	P2-9	↓	25	↓	GND	11.0
5	14	RED	20	P2-10	3	30	SOLDER	+5B	10.50

NOTES:
1. USE TIE WRAPS (X) ITEM "4 AT BREAKOUT POINTS SHOWN.
2. DOT (•) INDICATES NAIL LOCATION FOR ASSY USE ONLY. COVER NAILS WITH SHRINK TUBING.
3. WIRE LENGTH TOL WILL BE ± .12 IN
4. ALL CONN SHOWN FROM WIRING SIDE.
5. STRIP 1/8" INSULATION FROM POINTS 21 THRU 40 AND FULL TIN POINTS 21 THRU 40.

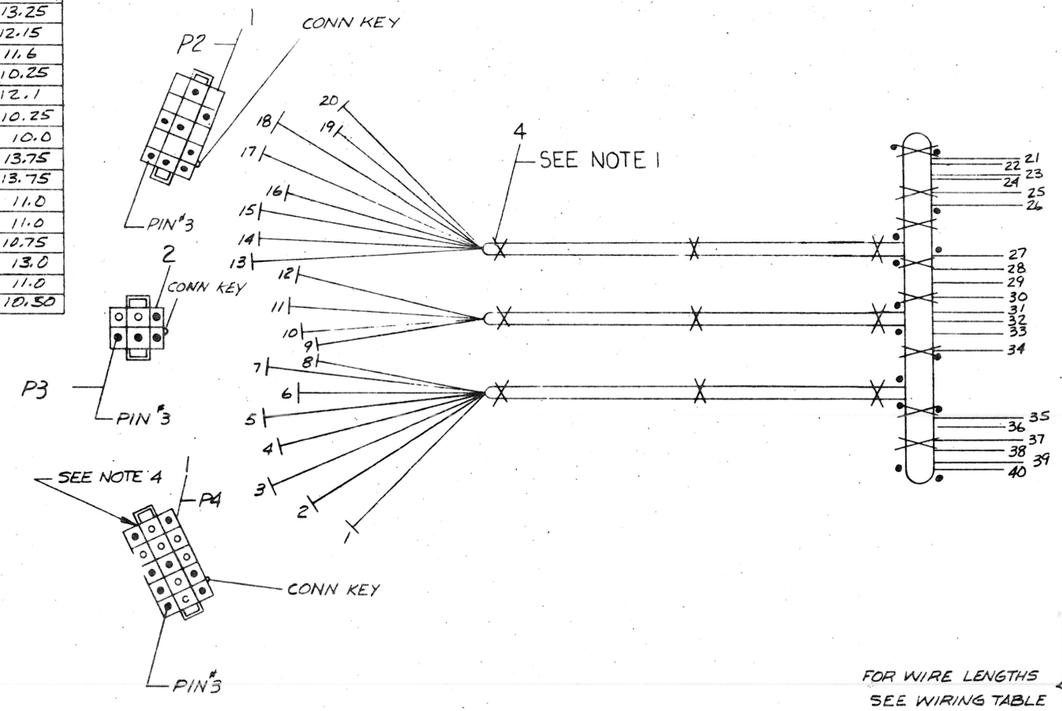

1	POWER HARNESS DECAL	7409872-2	16
AIR	WIRE #14 AWG (BRN)	9107370-11	15
AIR	WIRE #18 AWG, (GRN)	9107360-55	14
AIR	WIRE #18 AWG, (WHT)	9107360-99	13
AIR	WIRE #18 AWG (YEL)	9107360-44	12
AIR	WIRE #18 AWG, (VIO)	9107360-77	11
AIR	WIRE #18 AWG, (BRN)	9107360-11	10
AIR	WIRE #18 AWG, (BLU)	9107360-66	9
AIR	WIRE #18 AWG, (GRY)	9107360-88	8
AIR	WIRE #14 AWG, (ORN)	9107370-33	7
AIR	WIRE #14 AWG, (BLK)	9107370-00	6
AIR	WIRE #14 AWG, (RED)	9107370-22	5
17	TIE WRAP	9007031	4
20	PIN MALE	1209378-01	3
1	CONN 6 PIN HOUSING	1209351-06	2
2	CONN 15 PIN HOUSING	1209351-15	1

FOR WIRE LENGTHS SEE WIRING TABLE

DO NOT REDUCE
SCALE
0 IN — 6 IN — 12 IN
FOR MANUFACTURING PURPOSES ONLY

REVISIONS	CHK	CHANGE NO.	REV.
	KCT	7011109-00001	A
	P. Bruno 15 FEB 77		
	D. BARRY		
Per ECO 77			
	JC	7011109-00002	B
	P. Bruno 21 MAR 77		
	P. PORRECA		
	Paul Porreca Sept 77		

QUANTITY & VARIATION

DESCRIPTION	DWG./PART NO.	ITEM NO.

UNLESS OTHERWISE SPECIFIED DIMENSIONS ARE IN INCHES

ANGLES ±0° 30'	CLASS OF ACCURACY (CHECK ONE)	NOMINAL DIMENSION RANGE INCHES OVER 0 TO 0.2	OVER 0.2 TO 1.2	OVER 1.2 TO 4.0	OVER 4.0 TO 12.0	OVER 12.0 TO 40.0	OVER 40.0 TO 80.0
SURFACE QUALITY IN MICROINCHES	MEDIUM ☐	±.004	±.008	±.012	±.016	±.024	±.04
	PREFERRED ☐	±.012	±.016	±.025	±.04	±.063	±0.1

THIRD ANGLE PROJECTION

REMOVE BURRS AND BREAK SHARP CORNERS

DO NOT SCALE DWG

MATERIAL SEE PARTS LIST

FINISH —

DRN	P. Porreca	11/3/75
CHK'D	D. Barry	12/19/75
ENG	R. Barry	12/18/75
PROJ. ENG	R. Barry	12/18/75
PROD	K. Pelletier	12-19-75

NEXT HIGHER ASSY. C-AD-7012307-0-0

SCALE 1/4

SHEET 1 OF 1

FIRST USED ON DD11-DF, PF

digital

TITLE POWER HARNESS (BA11-F)

SIZE	CODE	NUMBER	REV
D	IA	7011109-0-0	B

DIST.

EC FORM NO. D 200-C

THIS DRAWING AND SPECIFICATIONS HEREIN ARE THE PROPERTY OF DIGITAL EQUIPMENT CORPORATION AND SHALL NOT BE REPRODUCED OR COPIED OR USED IN WHOLE OR IN PART AS THE BASIS FOR THE MANUFACTURE OR SALE OF ITEMS WITHOUT WRITTEN PERMISSION
COPYRIGHT © 1975 DIGITAL EQUIPMENT CORPORATION

NOTES:

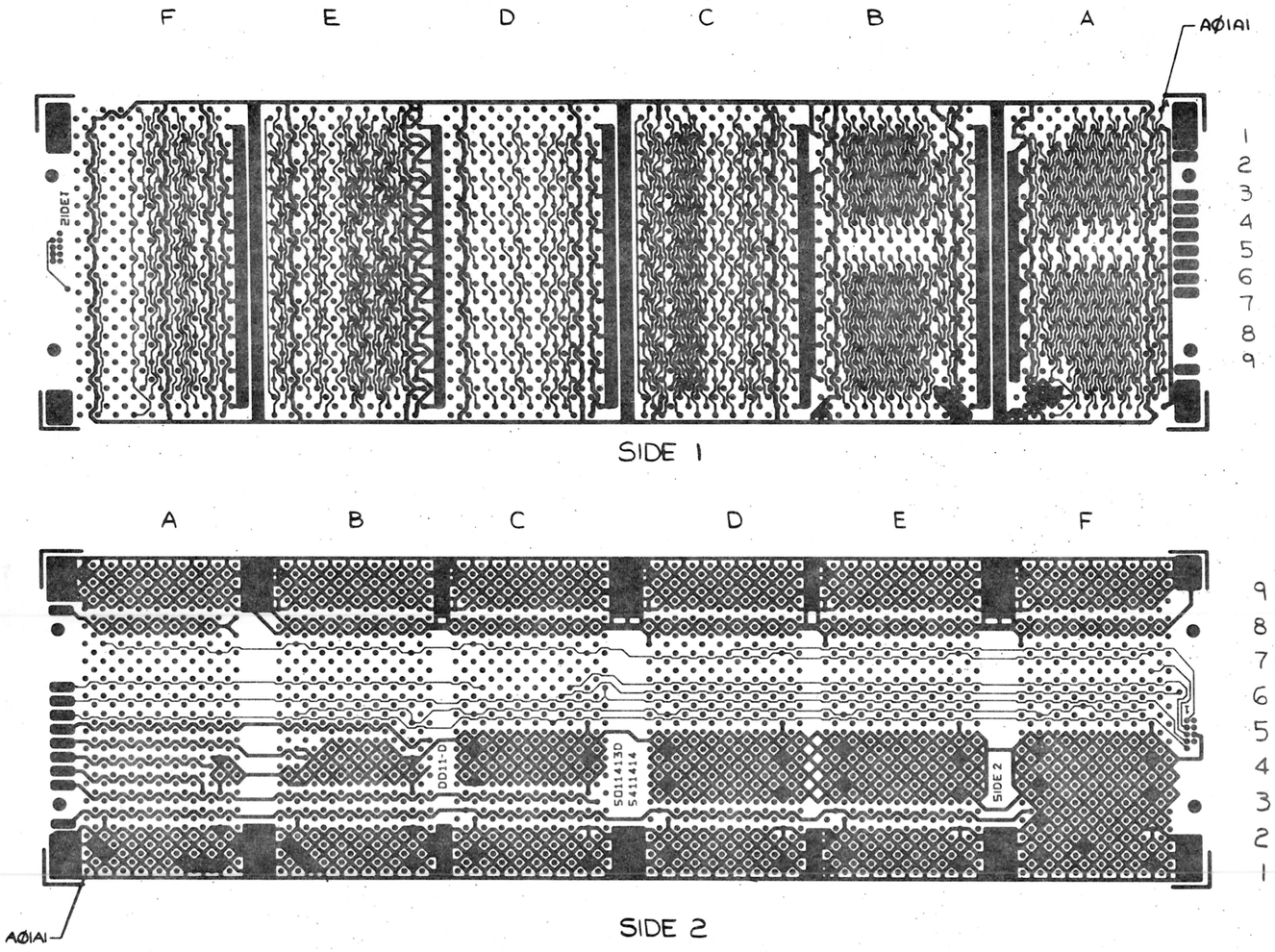

SIDE 1

SIDE 2

QTY	REF. DESIGNATION	DESCRIPTION	PART NO.	ITEM NO.
REF		AWT REV STATUS	A-WT-7011158-0	5
REF		MODULE ECO HISTORY	B-MH-5411414-0-6	4
REF		ASSY/DRILLING HOLE LAYOUT	D-AH-5411414-0-5	3
REF		X-Y COORDINATE HOLE LOCATION	K-CO-5411414-0-4	2
1		ETCHED CIRCUIT BOARD	5011413	1

PARTS LIST

FIRST USED ON OPTION MODEL: DD11-D

ETCH BOARD REV. D

IC TYPE	GND	+5V

GND AND 5V ARE USUALLY PIN 7 AND 14 RESPECTIVELY EXCEPTIONS ARE STATED ABOVE

IC PIN LOCATIONS

DEC NO.	EIA NO.	DEC NO.	EIA NO.

SEMICONDUCTOR CONVERSION CHART

D. BARRY 9-17-76
H. Demmore 9-3-76
5411414-00001 D
CHK CHANGE NO. REV.
REVISIONS

DRN. D. Phellen DATE 5/16/75
CHK'D. D. Hood DATE 5/21/75
ENG. R T Barry DATE 5/28/75
PROJ. ENG. R T Barry DATE 5/28/75
PROD. DATE

NEXT HIGHER ASSY C-IA-7011157-0-0
SCALE 1/1
SHEET 1 OF 1

digital

TITLE CIRCUIT SCHEMATIC

SIZE D CODE CS NUMBER 5411414-Ø-1 REV. D
DIST.

SIZE D CODE CS NUMBER 5411414-0-1 REV. D

This drawing and specifications, herein, are the property of Digital Equipment Corporation and shall not be reproduced or copied or used in whole or in part as the basis for the manufacture or sale of items without written permission. COPYRIGHT © 1975
DIGITAL EQUIP. CORP.

NOTES

1. ALL REV. ASSEMBLIES OF THE DD11-D ARE ELECTRICALLY THE SAME AS THIS RUN LIST BUT THE POINT TO POINT ROUTING OF A GIVEN WIRE TO ALL ITS ASSOCIATED PINS MAY BE DIFFERENT.

REVISIONS		
CHK	CHANGE NO.	REV.
RTB	DD11D-00004	B

FIRST USED ON OPTION MODEL	QTY.	DESCRIPTION	PART NO.	ITEM NO.
DD11-D		PARTS LIST		

DRN. D Sheller	DATE 5/21/75	digital EQUIPMENT CORPORATION MAYNARD, MASSACHUSETTS
CHK'D. [illegible]	DATE 5/28/75	
ENG. Richard Barry	DATE 5/28/75	TITLE: WIRE LIST DD11-D
PROJ. ENG. Richard Barry	DATE 5/28/75	
PROD. R.K. Peterson	DATE 6/12/75	
NEXT HIGHER ASSEMBLY: B-DD-DD11-D		SIZE K · CODE WL · NUMBER DD11-D-1 · REV. B
SCALE		
SHEET 1 OF 1		DIST.

DEC FORM NO. DRB 109